MASPETH TOWN HALL HVAC UPGRADE

53-37 72 STREET QUEENS,11378

STRUCTURAL ENGINEERING MODIFICATIONS AND SUPPORT DETAILS

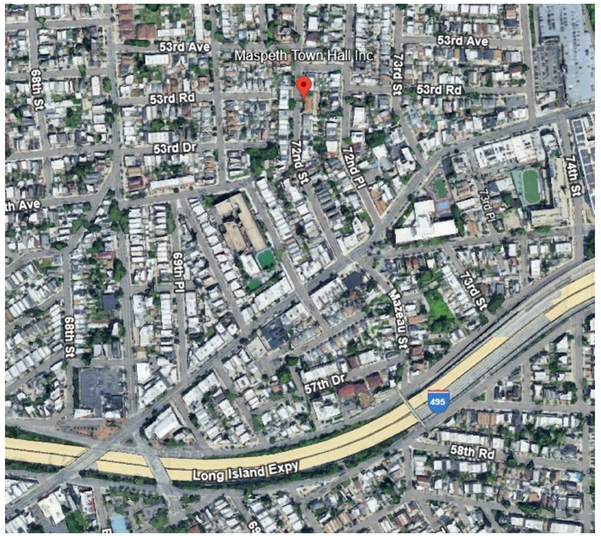

1 S000 VICINITY MAP

TABLE OF CONTENTS	
DRAWING NUMBER	DESCRIPTION
S-000.00	COVER SHEET
S-001.00	GENERAL NOTES
S-100.00	CELLAR LEVEL AND FIRST FLOOR FRAMING PLAN
S-101.00	ATTIC FRAMING PLAN
S-102.00	ROOF FRAMING PLAN
S-200.00	SECTIONS
S-300.00	DETAILS 1
S-301.00	DETAILS 2
S-302.00	TEMPORARY HOIST SYSTEM

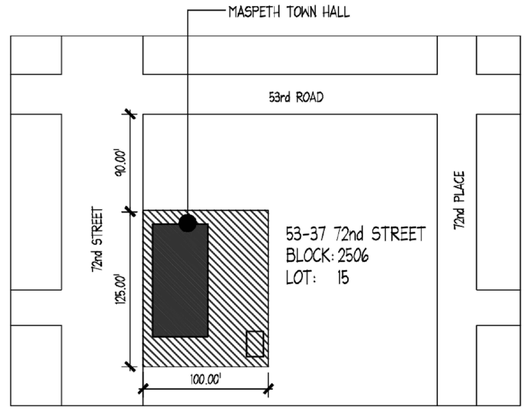

2 S000 PLOT PLAN NTS

DOB APPLICATION NUMBERS

GENERAL CONSTRUCTION : Q01349527-I1
MECHANICAL : Q01356605-I1
SPRINKLER : Q01356625-I1
FIRE ALARM : 2026-TMFALM-004627-PLAN
STRUCTURAL : Q01357376-I1

SCOPE OF WORK

STRUCTURAL SCOPE IN CONJUNCTION WITH INTERIOR RENOVATION FOR ENLARGEMENT OF ATTIC OPENING, REPLACEMENT OF INSULATION AT ROOF RAFTERS, AND ASSOCIATED WORK AS PER PLANS FILED HEREWITH. NO CHANGE IN USE, EGRESS, OR OCCUPANCY.

ZONING INFORMATION

ADDRESS: 53-37
BLOCK: 2506
LOT: 15
ZONING: R4-1
ZONING MAP: 13c

PROPERTY IS NOT IN NYC FLOOD ZONE

BUILDING INFORMATION

APPLICABLE BUILDING CODE: 1968 NYC BUILDING CODE
YEAR BUILT: 1890
FIRE PROTECTION: FULLY SPRINKLERED
CONSTRUCTION CLASSIFICATION: II-E
BUILDING CLASS: G - EDUCATION
STORIES/BUILDING HEIGHT: 1 STORY + CELLAR / 28'-0"
NO. OF DWELLING UNITS: 0

DOB APPROVAL STAMP

Md Shahnewaz Piash
APPROVED
Date: 07/09/2026

SPONSOR AGENCY
NYC DEPARTMENT OF CITYWIDE ADMINISTRATIVE SERVICES
53-37 72nd STREET
MASPETH, NY 11378
TEL (212) 669-1357

SPONSOR INSTITUTION
MASPETH TOWN HALL
53-37 72nd STREET
MASPETH, NY 11378
TEL (718) 335-6049

ARCHITECT
ANTHONY JOHNSON ARCHITECT LLC
80 EIGHTH AVENUE
New York, NY 10011
TEL (646) 930-2135

MEP
COLLECTIF ENGINEERING PLLC
27 WEST 20TH STREET
New York, NY 10011
TEL (646) 610-0343

STRUCTURAL ENGINEER
INNOVATIVE STRUCTURAL AND SPECIALTY ENGINEERING PLLC
200 VESEY STREET 24TH FLOOR
New York, NY 10281
TEL (646) 974-1389

REVISIONS:

NUMBER	DESCRIPTION	DATE
	REVISED PER DOB OBJECTIONS	06/29/26
	ISSUE FOR BID	03/27/26

Department of Design and Construction

DIVISION OF PUBLIC BUILDINGS

CAPITAL PROJECT NUMBER:
PWQMAHVAC

PROJECT
MASPETH TOWN HALL HVAC UPGRADE
53-37 72 STREET
QUEENS, NY 11378

FOR THE:
NYC DEPARTMENT OF CITYWIDE ADMINISTRATIVE SERVICES

DRAWING TITLE:
COVER SHEET

SEAL & SIGNATURE

STATE OF NEW YORK · RADHA S. MAJMUDAR · 083405 · LICENSED PROFESSIONAL ENGINEER

DATE:	06/29/26
PROJECT NO:	####
DRAWN BY:	##
CHECKED BY:	##
DRAWING NUMBER:	S-000.00
NYC DOB NO: Q01357376-I1	1OF9

G GENERAL

G.1 ALL WORK SHALL COMPLY WITH THE 2022 NEW YORK CITY BUILDING CODE.

G.2 THE STRUCTURAL CONSTRUCTION DRAWINGS WILL BE USED IN CONJUNCTION WITH THE SPECIFICATIONS AND THE ARCHITECTURAL AND MECHANICAL CONSTRUCTION DRAWINGS. IF A DISCREPANCY EXISTS BETWEEN ANY OF THE CONTRACT DOCUMENTS, THE MOST STRINGENT REQUIREMENT SHALL APPLY.

G.3 BEFORE PROCEEDING WITH ANY WORK, THE GENERAL CONTRACTOR OR CONSTRUCTION MANAGER WILL VERIFY THAT ALL MAJOR DIMENSIONS (LOCATIONS OF GRID LINES, COLUMNS, SLAB EDGES, ETC.) SHOWN ON STRUCTURAL DRAWINGS ARE THE SAME AS SHOWN ON ARCHITECTURAL DRAWINGS, AND THAT EXISTING CONDITIONS ARE AS INDICATED. ANY VARIANCES SHALL BE BROUGHT TO THE ARCHITECT'S ATTENTION IN WRITING.

G.4 THE GENERAL CONTRACTOR OR CONSTRUCTION MANAGER SHALL BE SOLELY RESPONSIBLE FOR COORDINATION BETWEEN TRADES, INCLUDING BUT NOT LIMITED TO THE LOCATION OF SLOTS, TRENCHES, AND SLEEVES AS REQUIRED FOR THE MECHANICAL OR OTHER TRADES AND THE PROVISION AND/OR INSTALLATION OF ANCHORS, INSERTS, HANGERS, ETC. AS REQUIRED FOR THE VARIOUS TRADES.

G.5 CONTROL OVER OR CHARGE OF AND RESPONSIBILITY FOR CONSTRUCTION MEANS, METHODS, TECHNIQUES, SEQUENCES OR PROCEDURES, OR FOR SAFETY PRECAUTIONS AND PROGRAMS IN CONNECTION WITH THE WORK OF THE PROJECT ARE SOLELY THE GENERAL CONTRACTOR'S OR CONSTRUCTION MANAGER'S RESPONSIBILITY.

G.6 THE CONSTRUCTION MANAGER OR GENERAL CONTRACTOR SHALL BE SOLELY RESPONSIBLE FOR ACTS OR OMISSIONS OF CONTRACTORS OR ANY OTHER PERSONS PERFORMING ANY OF THE WORK, OR FOR THE FAILURE OF ANY OF THEM TO CARRY OUT THE WORK PER THE CONSTRUCTION DOCUMENTS.

G.7 THE GENERAL CONTRACTOR OR CONSTRUCTION MANAGER SHALL BE SOLELY AND FULLY RESPONSIBLE FOR THE SAFETY AND STABILITY OF EXISTING ADJACENT STRUCTURES, INCLUDING BUT NOT LIMITED TO BUILDINGS, SIDEWALKS, ROADWAYS, AND UTILITIE,S AND FOR ANY METHODS REQUIRED TO ENSURE THAT SAFETY AND STABILITY.

G.8 EXISTING STRUCTURAL ELEMENTS LABELED AS "ASSUMED" SHALL BE VERIFIED BY THE CONTRACTOR IN THE FIELD PRIOR TO FABRICATION OR INSTALLATION OF NEW WORK. REPORT DISCREPANCIES TO THE STRUCTURAL ENGINEER.

G.9 THE GENERAL CONTRACTOR OR CONSTRUCTION MANAGER SHALL MAKE NO DEVIATION FROM CONTRACT DOCUMENTS WITHOUT THE PRIOR WRITTEN APPROVAL OF THE ARCHITECT.

G.10 THE GENERAL CONTRACTOR OR CONSTRUCTION MANAGER SHALL REPORT TO THE ARCHITECT, IN WRITING, ANY DISCREPANCIES, AMBIGUITIES, OR CONTRADICTIONS IN THE CONSTRUCTION DOCUMENTS.

G.11 ALL STRUCTURAL OPENINGS FOR NEW HVAC EQUIPMENT WILL BE COORDINATED WITH MECHANICAL DRAWINGS. FINAL LOCATIONS AND EQUIPMENT LOADS SHALL BE VERIFIED WITH STRUCTURAL SUPPORT FRAMING BEFORE INSTALLATION.

G.12 THE SHIPS' LADDER ASSEMBLY SHALL BE FABRICATED AND INSTALLED IN ACCORDANCE WITH SECTION 05 50 00 OF THE PROJECT SPECIFICATIONS AND THE STRUCTURAL DETAILS SHOWN ON DRAWINGS S-101, S-200, AND S-301.

C CAST-IN-PLACE CONCRETE

C.1 ALL CONCRETE WORK SHALL CONFORM TO THE MOST RECENT ACI BUILDING CODE REQUIREMENTS FOR STRUCTURAL CONCRETE.

C.2 CONCRETE
C.2A UNLESS OTHERWISE NOTED, CONCRETE SHALL BE NORMAL WEIGHT CONCRETE WITH A MINIMUM SPECIFIED COMPRESSIVE STRENGTH OF 4,000 PSI AT 28 DAYS. AIR ENTRAINMENT SHALL BE PROVIDED WHERE CONCRETE IS EXPOSED TO FREEZE-THAW CONDITIONS OR WHERE REQUIRED BY PROJECT SPECIFICATIONS.

C.3 REINFORCING
C.3A ALL REINFORCING BARS SHALL CONFORM TO ASTM A615 UNLESS OTHERWISE NOTED.
C.3B WELDED WIRE FABRIC SHALL CONFORM TO ASTM A1064/A1064M.
C.3C ALL REINFORCING IN SIDEWALK RAMP SLABS SHALL BE EPOXY-COATED PER ASTM A775.

C.4 DEVELOPMENT LENGTHS
C.4A DEVELOPMENT LENGTHS OF REINFORCING (LD, LAH, OR LDC) SHALL BE DETERMINED PER THE REQUIREMENTS OF ACI 318, CHAPTER 12.
C.4B TYPICAL DEVELOPMENT AND LAP SPLICE LENGTHS FOR ASTM A615 GRADE 60 REINFORCING BARS WITH NORMAL WEIGHT CONCRETE (F'C = 4000 PSI) ARE PROVIDED BELOW. CONTRACTOR SHALL VERIFY ALL FIELD CONDITIONS AND CONTACT THE ENGINEER IF ANY SPECIAL CONDITIONS EXIST.

BAR SIZE	TENSION DEVELOPMENT LENGTH (LD)	COMPRESSION DEVELOPMENT LENGTH (LD)	CLASS B LAP SPLICE (LAH)
#4	25 IN.	20 IN.	38 IN.
#5	31 IN.	24 IN.	47 IN.
#6	38 IN.	29 IN.	57 IN.
#7	49 IN.	37 IN.	74 IN.
#8	57 IN.	43 IN.	86 IN.
#9	71 IN.	54 IN.	107 IN.
#10	83 IN.	63 IN.	125 IN.
#11	96 IN.	72 IN.	144 IN.

C.4C FOR MECHANICAL SPLICES (LDC), PROVIDE SPLICES IN ACCORDANCE WITH THE MANUFACTURER'S PUBLISHED REQUIREMENTS AND APPLICABLE ACI 318 PROVISIONS.

C.5 ALL REINFORCING SHALL BE HELD RIGIDLY AND ACCURATELY IN PLACE, AND PROTECTED AGAINST DISPLACEMENT BEFORE AND DURING CASTING. IF NECESSARY, ADDITIONAL BARS AND/OR STIRRUPS SHALL BE PROVIDED TO FURNISH SUPPORT FOR ALL REINFORCING.

C.6 FOR TREATMENT OF EXPOSED CONCRETE, SEE ARCHITECTURAL DRAWINGS AND SPECIFICATIONS.

S STRUCTURAL STEEL

S.1 ALL STRUCTURAL STEEL MATERIAL, FABRICATION, AND ERECTION SHALL COMPLY WITH THE REQUIREMENTS OF THE AISC SPECIFICATION FOR STRUCTURAL STEEL BUILDINGS, INCLUDING APPLICABLE COMMENTARY AND SUPPLEMENTAL PROVISIONS, AND APPLICABLE PROJECT SPECIFICATIONS. CONNECTIONS TO EXISTING STRUCTURAL STEEL SHALL BE FIELD VERIFIED PRIOR TO FABRICATION.

S.2 STRUCTURAL STEEL SHALL CONFORM TO APPLICABLE ASTM STANDARDS. UNLESS OTHERWISE NOTED, STRUCTURAL W-SHAPES SHALL BE ASTM A992 AND MISCELLANEOUS PLATES AND SHAPES SHALL BE ASTM A36 OR ASTM A572 GRADE 50.

S.3 WELDING
S.3.1 ALL WELDING SHALL BE PERFORMED IN ACCORDANCE WITH AWS D1.1 STRUCTURAL WELDING CODE – STEEL.
S.3.2 WELD ELECTRODES AND FILLER METALS SHALL COMPLY WITH AWS REQUIREMENTS AND SHALL BE SUITABLE FOR THE BASE METAL BEING WELDED.
S.3.3 COMPLETE JOINT PENETRATION (CJP) WELDS SHALL BE PROVIDED ONLY WHERE SPECIFICALLY INDICATED ON THE DRAWINGS. FILLET WELDS SHALL BE AS SHOWN.
S.3.4 WELDABILITY OF EXISTING STRUCTURAL STEEL SHALL BE VERIFIED PRIOR TO WELDING WHERE CONNECTIONS TO EXISTING STEEL ARE REQUIRED.

S.4 BOLTING
S.4.1 HIGH-STRENGTH BOLTS SHALL CONFORM TO ASTM F3125 GRADE A325, UNLESS OTHERWISE NOTED.
S.4.2 BOLT DIAMETERS AND CONNECTION REQUIREMENTS SHALL BE AS INDICATED ON THE DRAWINGS.
S.4.3 HIGH-STRENGTH BOLTS SHALL BE INSTALLED IN ACCORDANCE WITH AISC SPECIFICATION REQUIREMENTS, INCLUDING PRETENSIONING WHERE REQUIRED.

S.5 SURFACE PREPARATION AND CONTACT SURFACES
S.5.1 FAYING SURFACES AND CONTACT AREAS SHALL BE FREE OF SCALE, OIL, PAINT, LACQUER, AND OTHER FOREIGN MATERIAL THAT WOULD PREVENT PROPER BEARING OR REQUIRED SLIP RESISTANCE.
S.5.2 BURRS OR IRREGULARITIES THAT WOULD PREVENT SOLID SEATING OF CONNECTED PARTS SHALL BE REMOVED PRIOR TO ASSEMBLY.
S.5.3 GALVANIZED SURFACES SHALL BE PREPARED IN ACCORDANCE WITH APPLICABLE ASTM STANDARDS, INCLUDING ROUGHENING OR TREATMENT WHERE REQUIRED FOR CONNECTION PERFORMANCE.

S.6 ALL CONTACT SURFACES, INCLUDING SURFACES ADJACENT TO THE BOLT HEAD AND NUT, SHALL BE FREE OF SCALE, OIL, PAINT, LACQUER, AND OTHER FOREIGN MATERIAL. BURRS THAT WOULD PREVENT SOLID SEATING OF THE CONNECTED PARTS IN THE SNUG TIGHT CONDITION SHALL BE REMOVED. CONTACT SURFACES THAT ARE HOT-DIP GALVANIZED IN ACCORDANCE WITH ASTM A123 AND ROUGHENED BY MEANS OF AND WIRE BRUSHING (POWER BRUSHING IS PROHIBITED) WILL BE PERMITTED.

SA STRUCTURAL ALUMINUM

SA.1 ALL ALUMINUM MATERIAL, FABRICATION, AND ERECTION SHALL COMPLY WITH THE APPLICABLE REQUIREMENTS OF THE ALUMINUM DESIGN MANUAL AND PROJECT SPECIFICATIONS.

SA.2 UNLESS OTHERWISE NOTED, ALUMINUM SHAPES, PLATES, AND TUBES SHALL CONFORM TO APPLICABLE ASTM STANDARDS AND SHALL BE OF ALLOY AND TEMPER SUITABLE FOR THE INTENDED STRUCTURAL APPLICATION.

SA.3 ALL WELDING OF ALUMINUM SHALL BE PERFORMED IN ACCORDANCE WITH APPLICABLE AWS REQUIREMENTS FOR ALUMINUM.

SA.4 FASTENERS, ANCHORS, AND CONNECTION HARDWARE USED WITH ALUMINUM SHALL BE SELECTED AND DETAILED TO PREVENT GALVANIC CORROSION. PROVIDE ISOLATION BETWEEN DISSIMILAR METALS WHERE REQUIRED.

SA.5 EXPOSED ALUMINUM MEMBERS SHALL BE FABRICATED AND FINISHED IN ACCORDANCE WITH PROJECT SPECIFICATIONS.

SD SHOP DRAWINGS – STRUCTURAL

SD.1 CONTRACTOR SHALL SUBMIT STRUCTURAL SHOP DRAWINGS TO THE ARCHITECT FOR DISTRIBUTION TO THE STRUCTURAL ENGINEER FOR REVIEW. SUBMITTALS SHALL DEMONSTRATE CONFORMANCE WITH THE DESIGN INTENT AND REQUIREMENTS INDICATED IN THE CONTRACT DOCUMENTS.

SD.2 DEVIATIONS FROM CONTRACT DOCUMENTS OR PROPOSED ALTERNATIVES SHALL BE CLEARLY IDENTIFIED AND SPECIFICALLY FLAGGED ON SUBMITTALS.

SD.3 SHOP DRAWINGS SHALL NOT BE USED AS A SUBSTITUTE FOR FORMAL REQUESTS FOR INFORMATION (RFIs), SUBSTITUTION REQUESTS, OR OTHER CONTRACTUAL PROCEDURES.

SD.4 REVIEW BY THE STRUCTURAL ENGINEER IS LIMITED TO CHECKING GENERAL CONFORMANCE WITH THE DESIGN INTENT AND INFORMATION SHOWN IN THE STRUCTURAL CONTRACT DOCUMENTS AND SHALL NOT RELIEVE THE CONTRACTOR OF RESPONSIBILITY FOR DIMENSIONS, QUANTITIES, FABRICATION DETAILS, MEANS AND METHODS OF CONSTRUCTION, SEQUENCING, SAFETY PRECAUTIONS, OR COORDINATION WITH OTHER TRADES.

SD.5 REVIEW OF AN INDIVIDUAL COMPONENT OR CONNECTION SHALL NOT CONSTITUTE REVIEW OF THE ENTIRE ASSEMBLY, SYSTEM, OR SUPPORT CONDITION IN WHICH THE COMPONENT IS USED.

SD.6 PARTIAL OR INCOMPLETE SUBMITTALS MAY BE RETURNED WITHOUT REVIEW.

SD.7 AFTER INITIAL REVIEW BY THE ENGINEER OF RECORD, ALL RESUBMISSIONS SHALL CLEARLY IDENTIFY REVISIONS MADE SINCE THE PRIOR SUBMITTAL. CHANGES SHALL BE DISTINCTLY CLOUDED OR OTHERWISE MARKED. REVIEW OF RESUBMISSIONS SHALL BE LIMITED TO REVISED AREAS.

SD.8 NO RELATED STRUCTURAL WORK SHALL COMMENCE UNTIL RELEVANT SHOP DRAWINGS HAVE BEEN REVIEWED AND MARKED "REVIEWED," "REVIEWED AS NOTED," "APPROVED," OR "APPROVED AS NOTED," AS APPLICABLE. SUCH REVIEW SHALL NOT RELIEVE THE CONTRACTOR OF RESPONSIBILITY FOR FABRICATION, FIELD DIMENSIONS, OR CONSTRUCTION METHODS.

SD.9 SHOP DRAWINGS SHALL BE SUBMITTED FOR STRUCTURAL ATTACHMENTS TO EXISTING FRAMING, INCLUDING BUT NOT LIMITED TO MECHANICAL HANGER SUPPORTS, RAFTER ATTACHMENTS, CONNECTION PLATES, AND ANCHORAGE DETAILS.

SD.10 THE REQUEST FOR INFORMATION (RFI) PROCESS IS INTENDED SOLELY FOR CLARIFICATION OF DESIGN INTENT OR MINOR COORDINATION MATTERS AND SHALL NOT BE USED TO DEVELOP OR PRE-ENGINEER STRUCTURAL SHOP DRAWINGS.

SI STRUCTURAL INSPECTIONS

SI.1 SPECIAL INSPECTIONS REQUIRED BY THE STRUCTURAL SCOPE OF WORK SHALL BE PERFORMED IN ACCORDANCE WITH CHAPTER 17 OF THE 2022 NEW YORK CITY BUILDING CODE.

SI.2 THE FOLLOWING SPECIAL INSPECTIONS MAY BE REQUIRED, WHERE APPLICABLE TO THE STRUCTURAL SCOPE OF WORK AND AS DETERMINED BY THE BUILDING CODE OR AUTHORITY HAVING JURISDICTION:
CAST-IN-PLACE CONCRETE (BC 1705.3)
STRUCTURAL STEEL DETAILS (BC 1705.2.2)
STRUCTURAL STABILITY OF EXISTING STRUCTURES (BC 1705.25.1)
POST-INSTALLED ANCHORS (BC 1705.3.7)
STRUCTURAL WOOD FRAME CONSTRUCTION, WHERE APPLICABLE (BC 1704 AND BC 110.3.3)
FINAL INSPECTION AND DOCUMENTATION CONFIRMING COMPLETION OF REQUIRED SPECIAL INSPECTIONS SHALL BE PROVIDED IN ACCORDANCE WITH BC 110.5 AND BC CHAPTER 17.

SI.3 SPECIAL INSPECTIONS SHALL BE CONTINUOUS UNLESS PERIODIC SPECIAL INSPECTIONS ARE PERMITTED BY THE BUILDING CODE.

SI.4 SPECIAL INSPECTIONS SHALL BE PERFORMED BY QUALIFIED SPECIAL INSPECTORS OR AGENCIES ACCEPTABLE TO THE AUTHORITY HAVING JURISDICTION AND TO THE ENGINEER OF RECORD.

SI.5 STRUCTURAL WORK REQUIRING SPECIAL INSPECTION SHALL REMAIN ACCESSIBLE AND EXPOSED UNTIL APPROVED BY THE SPECIAL INSPECTOR.

SI.6 SPECIAL INSPECTORS SHALL REPORT ANY DISCREPANCIES OR NON-CONFORMING WORK TO THE ENGINEER OF RECORD AND THE AUTHORITY HAVING JURISDICTION.

SI.7 SPECIAL INSPECTION REPORTS SHALL BE FURNISHED TO THE ENGINEER OF RECORD AND THE AUTHORITY HAVING JURISDICTION AS REQUIRED BY THE BUILDING CODE.

SI.8 MINOR CONCRETE WORK NOT MEETING THE THRESHOLDS FOR SPECIAL INSPECTION UNDER BC 1705.3 MAY BE EXEMPT FROM SPECIAL INSPECTION REQUIREMENTS, PROVIDED STRUCTURAL DESIGN INTENT IS MAINTAINED.

SI.9 WORK THAT DOES NOT ALTER LOAD PATHS OR STRUCTURAL SYSTEM STABILITY MAY NOT REQUIRE STRUCTURAL STABILITY SPECIAL INSPECTIONS, PROVIDED EXISTING CONDITIONS ARE VERIFIED IN THE FIELD AND NO UNFORESEEN CONDITIONS ARE ENCOUNTERED.

W SAWN LUMBER, GLUED LAMINATED TIMBER, AND WOOD STRUCTURAL PANELS

W.1 GENERAL
ALL STRUCTURAL WOOD DESIGN AND CONSTRUCTION SHALL COMPLY WITH THE REQUIREMENTS OF THE 2022 NEW YORK CITY BUILDING CODE AND THE NATIONAL DESIGN SPECIFICATION (NDS) FOR WOOD CONSTRUCTION, LATEST ADOPTED EDITION.

W.2 APPLICABLE STANDARDS

NEW STRUCTURAL WOOD MEMBERS AND WOOD STRUCTURAL PANELS SHALL COMPLY WITH THE FOLLOWING MINIMUM STANDARDS:
A. PS-20 – AMERICAN SOFTWOOD LUMBER STANDARD
B. APA – THE ENGINEERED WOOD ASSOCIATION (PLYWOOD AND WOOD STRUCTURAL PANELS)
C. NDS – NATIONAL DESIGN SPECIFICATION FOR WOOD CONSTRUCTION
GRADE MARKING SHALL BE PROVIDED BY AN APPROVED LUMBER GRADING AGENCY.

W.3 EXISTING WOOD FRAMING
EXISTING WOOD MEMBERS SHOWN ON THE DRAWINGS SHALL BE FIELD VERIFIED BY THE CONTRACTOR PRIOR TO INSTALLATION OF NEW WORK.
ANY DETERIORATION, DAMAGE, FIELD MODIFICATIONS, OR CONDITIONS DIFFERING FROM THOSE ASSUMED IN DESIGN SHALL BE REPORTED TO THE ENGINEER OF RECORD FOR REVIEW PRIOR TO PROCEEDING.

W.4 LUMBER MATERIAL REQUIREMENTS
ROUGH STRUCTURAL LUMBER SHALL BE DOUGLAS FIR-LARCH OR SOUTHERN PINE WITH A MAXIMUM MOISTURE CONTENT OF 19% AT TIME OF INSTALLATION.
A. NON-BEARING STUDS, BLOCKING, NAILERS, AND SIMILAR MEMBERS SHALL BE CONSTRUCTION LIGHT FRAMING GRADE OR BETTER.
B. STRUCTURAL BEARING MEMBERS INCLUDING ROOF RAFTERS, FLOOR JOISTS, AND OTHER LOAD-SUPPORTING MEMBERS SHALL BE NO.2 GRADE OR BETTER, UNLESS OTHERWISE NOTED.
C. WHERE SELECT STRUCTURAL GRADE MEMBERS ARE SPECIFICALLY INDICATED, THEY SHALL HAVE MINIMUM DESIGN VALUES OF
Fb = 1,200 PSI FOR SINGLE MEMBER USE AND E = 1,400,000 PSI.

W.5 BRIDGING
WOOD JOISTS SHALL BE BRIDGED AT 6'-0" MAXIMUM SPACING WITH AT LEAST ONE ROW OF 1" x 3" CROSS BRIDGING, UNLESS OTHERWISE NOTED.
CROSS BRIDGING SHALL BE CONSTRUCTION LIGHT FRAMING GRADE OR BETTER.

W.6 PROTECTION
ALL WOOD MEMBERS SHALL BE HANDLED, STORED, AND PROTECTED FROM DAMAGE AND MOISTURE PRIOR TO INSTALLATION.

W.7 FASTENERS AND CONNECTORS
PROVIDE ALL ANCHORS, ANCHOR BOLTS, JOIST HANGERS, STRAPS, TIES, NAILS, SCREWS, BOLTS, AND OTHER METAL FASTENING DEVICES REQUIRED FOR THE PROPER INSTALLATION OF THE WORK.
ALL PROPRIETARY CONNECTORS SHALL BE INSTALLED IN STRICT ACCORDANCE WITH THE MANUFACTURER'S PUBLISHED REQUIREMENTS.
PROVIDE ALL FASTENERS REQUIRED BY THE CONNECTOR MANUFACTURER, INCLUDING NAILS, SCREWS, BOLTS, AND WASHERS, UNLESS OTHERWISE SPECIFICALLY NOTED ON THE DRAWINGS.
CONNECTOR MODEL NUMBERS INDICATED ON THE DRAWINGS SHALL NOT BE SUBSTITUTED WITHOUT PRIOR WRITTEN APPROVAL OF THE ENGINEER OF RECORD.

X DESIGN LOADS

(PER 2022 NYC BUILDING CODE AND SITE-SPECIFIC ASCE HAZARD TOOL DATA UNLESS OTHERWISE NOTED)
ALL DESIGN LOADS ARE BASED ON THE 2022 NEW YORK CITY BUILDING CODE AND APPLICABLE REFERENCED STANDARDS. SITE-SPECIFIC ENVIRONMENTAL PARAMETERS HAVE BEEN TAKEN FROM THE ASCE HAZARD TOOL FOR THE PROJECT ADDRESS.

X.1 RISK CATEGORY:
RISK CATEGORY = II.

X.2 DEAD LOAD (DL):
SELF-WEIGHT OF STRUCTURE, PERMANENT PARTITIONS, MECHANICAL SYSTEMS, FIXED EQUIPMENT, AND ASSOCIATED STRUCTURAL SUPPORTS.

X.3 SUPERIMPOSED DEAD LOAD (SDL):
10 PSF FOR MECHANICAL AREAS AND CEILING CONSTRUCTION UNLESS OTHERWISE NOTED.

X.4 LIVE LOAD (LL):
ATTIC FRAMING AND ASSOCIATED SUPPORTS ARE DESIGNED FOR 40 PSF LIVE LOAD CONSISTENT WITH THE CERTIFICATE OF OCCUPANCY LIMITATIONS AND INTENDED LIMITED MAINTENANCE ACCESS.
MECHANICAL EQUIPMENT ROOMS AND AREAS SUPPORTING EQUIPMENT SHALL BE DESIGNED FOR 150 PSF OR ACTUAL EQUIPMENT LOAD, WHICHEVER IS GREATER.
ATTIC OCCUPANCY LIMITATION:
THE ATTIC SPACE IS NOT DESIGNATED FOR HABITABLE, RESIDENTIAL, OFFICE, ASSEMBLY, OR STORAGE USE PER CERTIFICATE OF OCCUPANCY. STRUCTURAL DESIGN OF ATTIC FRAMING AND SUPPORTS IS BASED ON LIMITED MAINTENANCE ACCESS ONLY. ANY CHANGE IN OCCUPANCY OR LOADING SHALL REQUIRE STRUCTURAL RE-EVALUATION.

X.5 GROUND SNOW LOAD (PG):
48 PSF, SUBJECT TO ADJUSTMENT IN ACCORDANCE WITH APPLICABLE CODE PROVISIONS FOR ROOF GEOMETRY, EXPOSURE, THERMAL CONDITION, DRIFT, AND RELATED SNOW-LOAD EFFECTS.

X.6 WIND LOAD:
BASIC WIND SPEED = 117 MPH, 3-SECOND GUST, EXPOSURE CATEGORY B, IMPORTANCE FACTOR = 1.0, UNLESS OTHERWISE NOTED.

X.7 SEISMIC LOAD:
SITE CLASS = D.
SEISMIC DESIGN CATEGORY = C, USED AS A CONSERVATIVE DESIGN BASIS FOR THIS PROJECT.
SITE-SPECIFIC HAZARD DATA INDICATES SEISMIC DESIGN CATEGORY B FOR RISK CATEGORY II; STRUCTURAL DESIGN SHALL BE REVISITED IF REQUIRED BY FINAL CODE REVIEW OR PROJECT CRITERIA.

X.8 EQUIPMENT LOADS AND CONCENTRATED SUPPORT LOCATIONS

HVAC AND OTHER EQUIPMENT LOADS SHALL BE BASED ON ACTUAL UNIT WEIGHTS SHOWN ON THESE DRAWINGS AND FINAL APPROVED MECHANICAL SUBMITTALS. STRUCTURAL FRAMING AND SUPPORTS ARE DESIGNED FOR THESE LOADS IN COMBINATION WITH APPLICABLE CODE-REQUIRED LOADS.

NEW CONCENTRATED LOADS FROM MECHANICAL HANGERS OR EQUIPMENT SUPPORTS SHALL BE APPLIED ONLY AT LOCATIONS INDICATED ON STRUCTURAL DRAWINGS. ANY RELOCATION, MODIFICATION, OR ADDITIONAL LOADING SHALL REQUIRE REVIEW AND WRITTEN APPROVAL BY THE STRUCTURAL ENGINEER.

CONTRACTOR SHALL VERIFY FINAL EQUIPMENT WEIGHTS, SUPPORT LOCATIONS, AND FIELD CONDITIONS PRIOR TO FABRICATION AND INSTALLATION.

MECHANICAL EQUIPMENT SPECIFICATIONS

TAG	EMPTY WEIGHT (lbs)	LOCATION	MOUNTING TYPE
EDH-B-1	200	FIRST FLOOR	SUSPENDED FROM CEILING
OAP-B-1	200	FIRST FLOOR	SUSPENDED FROM CEILING
ACCU-1	414	EXTERIOR GRADE LEVEL	CONCRETE SLAB MOUNTED
ACCU-2	644	EXTERIOR GRADE LEVEL	CONCRETE SLAB MOUNTED
ACCU-3	822	EXTERIOR GRADE LEVEL	CONCRETE SLAB MOUNTED
OAP-A1	200	ATTIC	SUSPENDED FROM CEILING
EDH-A1	200	ATTIC	SUSPENDED FROM CEILING
AC-A1	200	ATTIC	MOUNTED ON EXISTING DUNNAGE
AC-A2	200	ATTIC	MOUNTED ON EXISTING DUNNAGE
RF-A1	122	ATTIC	SUSPENDED FROM CEILING
RF-A2	122	ATTIC	SUSPENDED FROM CEILING

Y ENGINEERING SERVICES

Y.1 ALL "ENGINEERING SERVICES" REFERENCED ON THESE DRAWINGS SHALL BE PERFORMED BY A PROFESSIONAL ENGINEER LICENSED IN THE STATE OF NEW YORK.

Y.2 ENGINEERING SERVICES SHALL INCLUDE, BUT ARE NOT LIMITED TO, THE FOLLOWING:

- HATCH LADDERS AND SHIPS' LADDERS
- HATCHES
- CHAIN LINK FENCES AND GATES

Y.3 WHERE ENGINEERING SERVICE IS PERMITTED, IT SHALL BE LIMITED TO THE DESIGN OF SPECIFIC COMPONENTS AND THE PREPARATION OF SHOP DRAWINGS AND CALCULATIONS IN ACCORDANCE WITH THE CONTRACT DOCUMENTS AND APPLICABLE CODES, AND SHALL BE PERFORMED BY A PROFESSIONAL ENGINEER LICENSED IN THE STATE OF NEW YORK.

Y.4 DESIGN CRITERIA, INCLUDING APPLICABLE LOADS, DEFLECTION LIMITS, AND PERFORMANCE REQUIREMENTS, HAVE BEEN PROVIDED IN THE CONTRACT DOCUMENTS SUCH THAT THE CONTRACTOR IS NOT REQUIRED TO MAKE ENGINEERING ASSUMPTIONS OR DESIGN DECISIONS.

Y.5 ALL QUESTIONS, REQUESTS FOR CLARIFICATION, OR COMMENTS BY THE CONTRACTOR REGARDING FIELD CONDITIONS, ENGINEERING CRITERIA, DESIGN INTENT, OR SUGGESTED ALTERNATE DESIGNS, INCLUDING THOSE RELATED TO MEANS AND METHODS, SHALL BE SUBMITTED IN WRITING AND SHALL REQUIRE REVIEW AND WRITTEN APPROVAL BY BOTH THE ENGINEER OF RECORD AND THE COMMISSIONER PRIOR TO IMPLEMENTATION.

Y.6 ALL ENGINEERING SERVICES SHALL BE SUBJECT TO REVIEW AND ACCEPTANCE BY THE ENGINEER OF RECORD AND, WHERE APPLICABLE, BY THE COMMISSIONER

DOB APPROVAL STAMP

Md Shahnewaz Piash
APPROVED
Date: 07/09/2026

SPONSOR AGENCY
NYC DEPARTMENT OF CITYWIDE ADMINISTRATIVE SERVICES
53–37 72nd STREET
MASPETH, NY 11378
TEL (212) 669–1357

SPONSOR INSTITUTION
MASPETH TOWN HALL
53–37 72nd STREET
MASPETH, NY 11378
TEL (718) 335–6049

ARCHITECT
ANTHONY JOHNSON ARCHITECT LLC
80 EIGHTH AVENUE
New York, NY 10011
TEL (646) 930–2135

MEP
COLLECTIF ENGINEERING PLLC
27 WEST 20TH STREET
New York, NY 10011
TEL (646) 610–0343

STRUCTURAL ENGINEER
INNOVATIVE STRUCTURAL AND SPECIALTY ENGINEERING PLLC
200 VESEY STREET 24TH FLOOR
New York, NY 10281
TEL (646) 974–1389

REVISIONS:

NUMBER	DESCRIPTION	DATE
	REVISED PER DOB OBJECTIONS	06/29/26
	ISSUE FOR BID	03/27/26

NYC DDC Department of Design and Construction

DIVISION OF PUBLIC BUILDINGS

CAPITAL PROJECT NUMBER:
PWQMAHVAC

PROJECT

MASPETH TOWN HALL HVAC UPGRADE

53-37 72 STREET
QUEENS, NY 11378

FOR THE:
NYC DEPARTMENT OF CITYWIDE ADMINISTRATIVE SERVICES

DRAWING TITLE:

GENERAL NOTES

SEAL & SIGNATURE

STATE OF NEW YORK · MISHA A MAJMUDAR · 083409 · LICENSED PROFESSIONAL ENGINEER

DATE:	06/29/26
PROJECT NO:	####
DRAWN BY:	##
CHECKED BY:	##

DRAWING NUMBER:
S-001.00

NYC DOB NO: Q01357376-I1

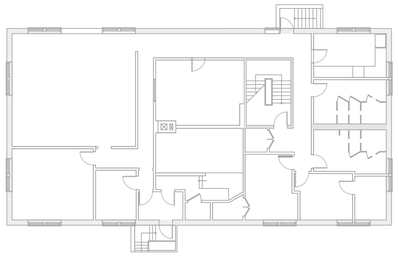

1 S100 CELLAR LEVEL FRAMING PLAN
SCALE: 1/16" = 1'-0"

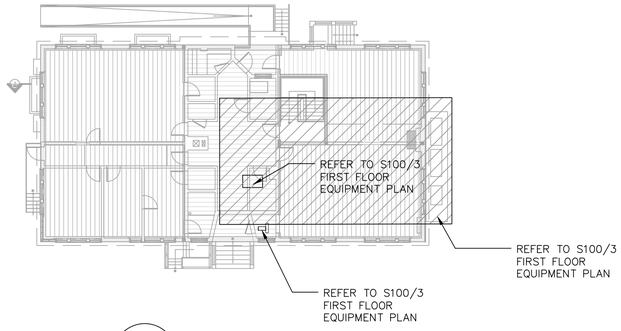

2 S100 FIRST FLOOR FRAMING PLAN
SCALE: 1/16" = 1'-0"

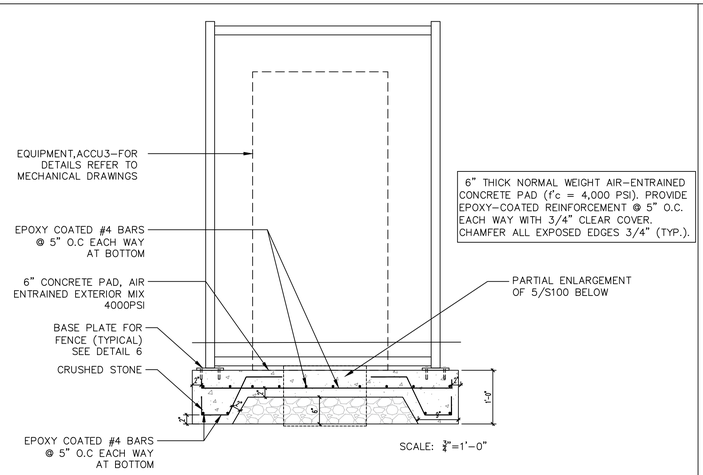

4 S100 FENCE ELEVATION
SCALE: 3/4" = 1'-0"

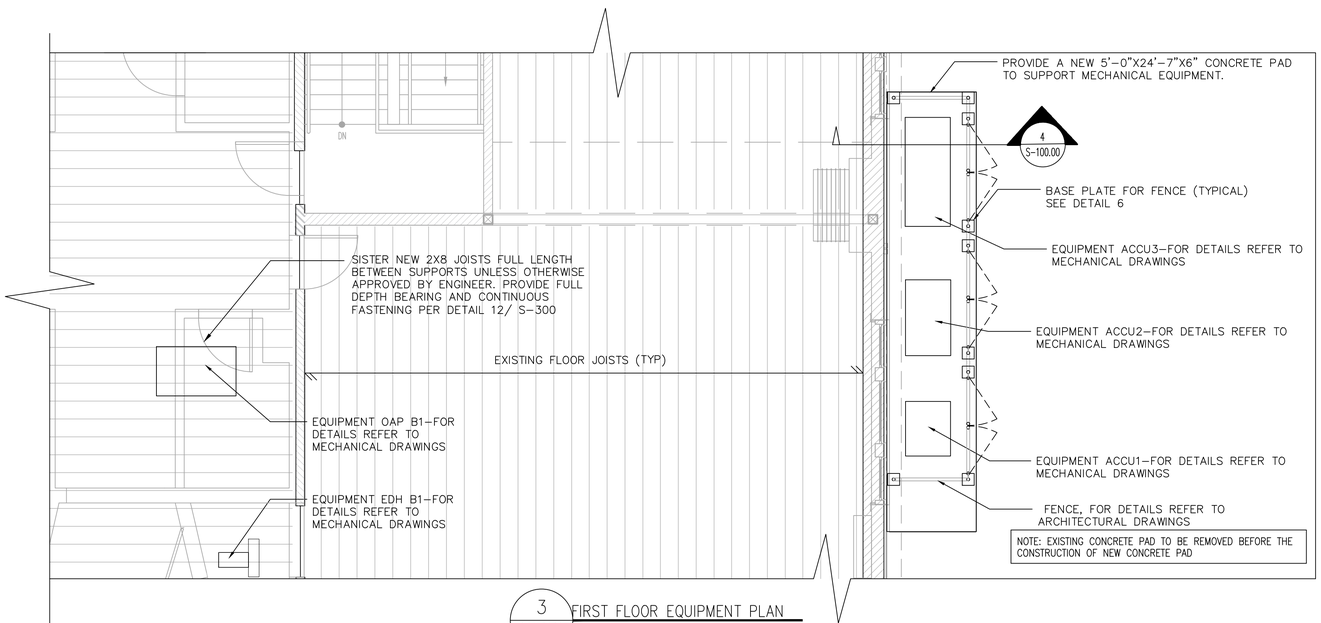

3 S100 FIRST FLOOR EQUIPMENT PLAN
SCALE: 1/4" = 1'-0"

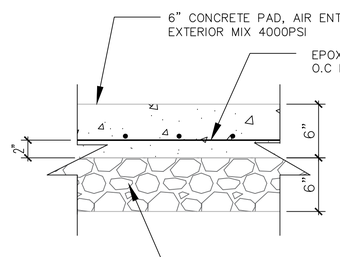

5 S100 PARTIAL ENLARGED SECTION AT FENCE BASE – SEE FENCE ELEVATION
SCALE: 1-1/2" = 1'-0"

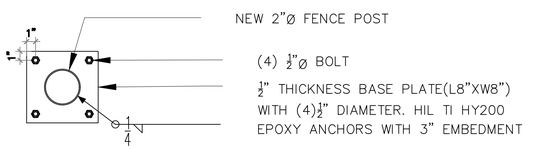

6 S100 BASE PLATE FOR FENCE
SCALE: 1-1/2" = 1'-0"

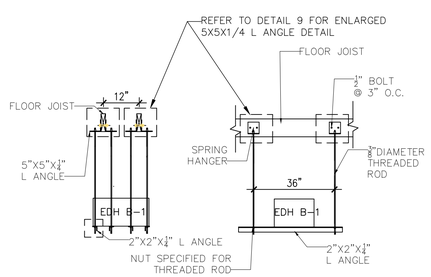

7 S100 HANGERS FOR CEILING SUSPENDED EQUIPMENT EDH B-1
SCALE: 3/8" = 1'-0"

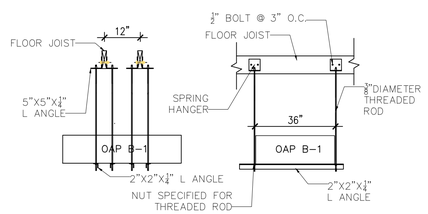

8 S100 HANGERS FOR CEILING SUSPENDED EQUIPMENT OAP B-1
SCALE: 3/8" = 1'-0"

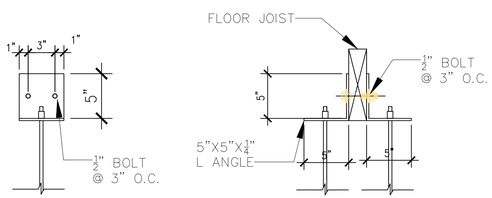

9 S100 ENLARGED DETAILS
SCALE: 1 1/2" = 1'-0"

SPONSOR AGENCY
NYC DEPARTMENT OF CITYWIDE ADMINISTRATIVE SERVICES
53-37 72nd STREET
MASPETH, NY 11378
TEL (212) 669-1357

SPONSOR INSTITUTION
MASPETH TOWN HALL
53-37 72nd STREET
MASPETH, NY 11378
TEL (718) 335-6049

ARCHITECT
ANTHONY JOHNSON ARCHITECT LLC
80 EIGHTH AVENUE
New York, NY 10011
TEL (646) 930-2135

MEP
COLLECTIF ENGINEERING PLLC
27 WEST 20TH STREET
New York, NY 10011
TEL (646) 610-0343

STRUCTURAL ENGINEER
INNOVATIVE STRUCTURAL AND SPECIALTY ENGINEERING PLLC
200 VESEY STREET 24TH FLOOR
New York, NY 10281
TEL (646) 974-1389

REVISIONS:

NUMBER	DESCRIPTION	DATE
	REVISED PER DOB OBJECTIONS	06/29/26
	ISSUE FOR BID	03/27/26

Department of Design and Construction

DIVISION OF PUBLIC BUILDINGS

CAPITAL PROJECT NUMBER:
PWQMAHVAC

PROJECT
MASPETH TOWN HALL HVAC UPGRADE

53-37 72 STREET
QUEENS, NY 11378

FOR THE:
NYC DEPARTMENT OF CITYWIDE ADMINISTRATIVE SERVICES

DRAWING TITLE:
CELLAR LEVEL AND FIRST FLOOR FRAMING PLAN

DOB APPROVAL STAMP
Md Shahnewaz Piash
APPROVED
Date: 07/09/2026

SEAL & SIGNATURE
STATE OF NEW YORK · ROBIN A. MAJMUDAR · 083409 · LICENSED PROFESSIONAL ENGINEER

DATE:	06/29/26
PROJECT NO:	####
DRAWN BY:	##
CHECKED BY:	##
DRAWING NUMBER:	**S-100.00**
NYC DOB NO: Q01357376-I1	3OF9

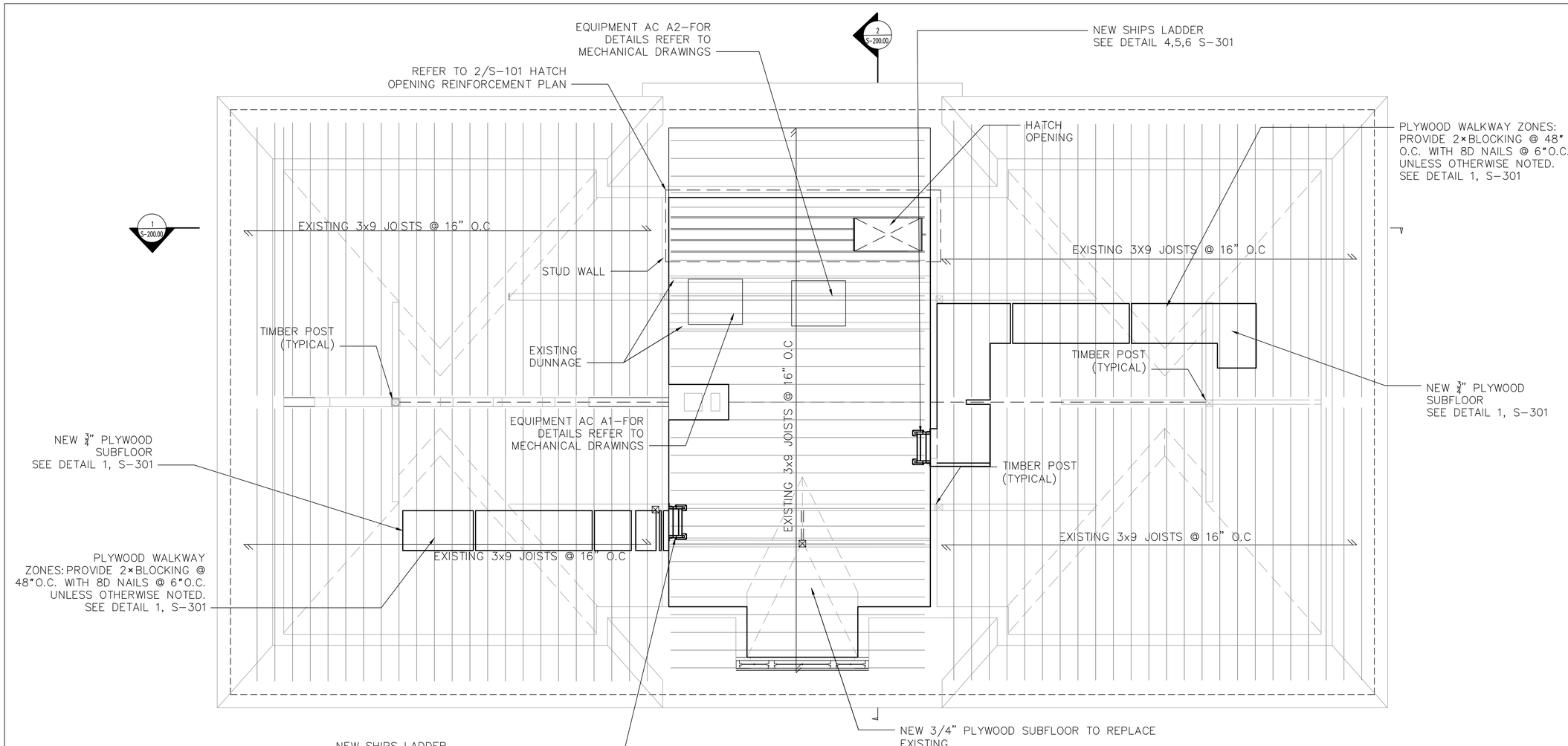

1 S101 ATTIC FRAMING PLAN
SCALE: 1/4" = 1'–0"

EXISTING JOISTS ARE ASSUMED CONTINUOUS UNLESS SHOWN OTHERWISE. JOISTS MAY BE CUT OR TRIMMED ONLY WHERE REQUIRED TO ACCOMMODATE NEW OPENINGS AND ONLY AFTER INSTALLATION OF HEADER OR REINFORCEMENT FRAMING AS SHOWN. CONTRACTOR SHALL VERIFY EXISTING CONDITIONS PRIOR TO CUTTING OR REMOVAL AND SHALL NOTIFY THE ENGINEER OF ANY DISCREPANCIES OR UNANTICIPATED CONDITIONS.

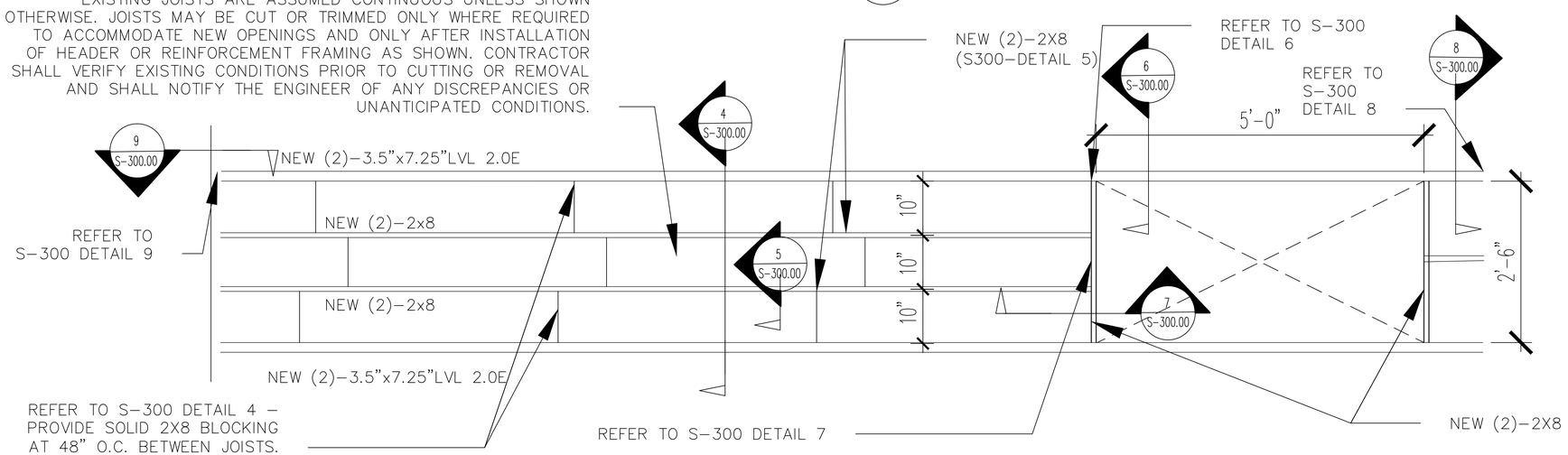

2 S101 HATCH OPENING REINFORCEMENT PLAN
SCALE: 1" = 1'–0"

N

DOB APPROVAL STAMP
Md Shahnewaz Piash
APPROVED
Date: 07/09/2026

SEAL & SIGNATURE

SPONSOR AGENCY
NYC DEPARTMENT OF CITYWIDE ADMINISTRATIVE SERVICES
53–37 72nd STREET
MASPETH, NY 11378
TEL (212) 669–1357

SPONSOR INSTITUTION
MASPETH TOWN HALL
53–37 72nd STREET
MASPETH, NY 11378
TEL (718) 335–6049

ARCHITECT
ANTHONY JOHNSON ARCHITECT LLC
80 EIGHTH AVENUE
New York, NY 10011
TEL (646) 930–2135

MEP
COLLECTIF ENGINEERING PLLC
27 WEST 20TH STREET
New York, NY 10011
TEL (646) 610–0343

STRUCTURAL ENGINEER
INNOVATIVE STRUCTURAL AND SPECIALTY ENGINEERING PLLC
200 VESEY STREET 24TH FLOOR
New York, NY 10281
TEL (646) 974–1389

REVISIONS:

NUMBER	DESCRIPTION	DATE
	REVISED PER DOB OBJECTIONS	06/29/26
	ISSUE FOR BID	03/27/26

Department of Design and Construction

DIVISION OF PUBLIC BUILDINGS

CAPITAL PROJECT NUMBER:
PWQMAHVAC

PROJECT
MASPETH TOWN HALL HVAC UPGRADE

53-37 72 STREET
QUEENS, NY 11378

FOR THE:
NYC DEPARTMENT OF CITYWIDE ADMINISTRATIVE SERVICES

DRAWING TITLE:
ATTIC FRAMING PLAN

DATE:	06/29/26
PROJECT NO:	#####
DRAWN BY:	##
CHECKED BY:	##
DRAWING NUMBER:	**S-101.00**
NYC DOB NO: Q01357376-I1	4OF9

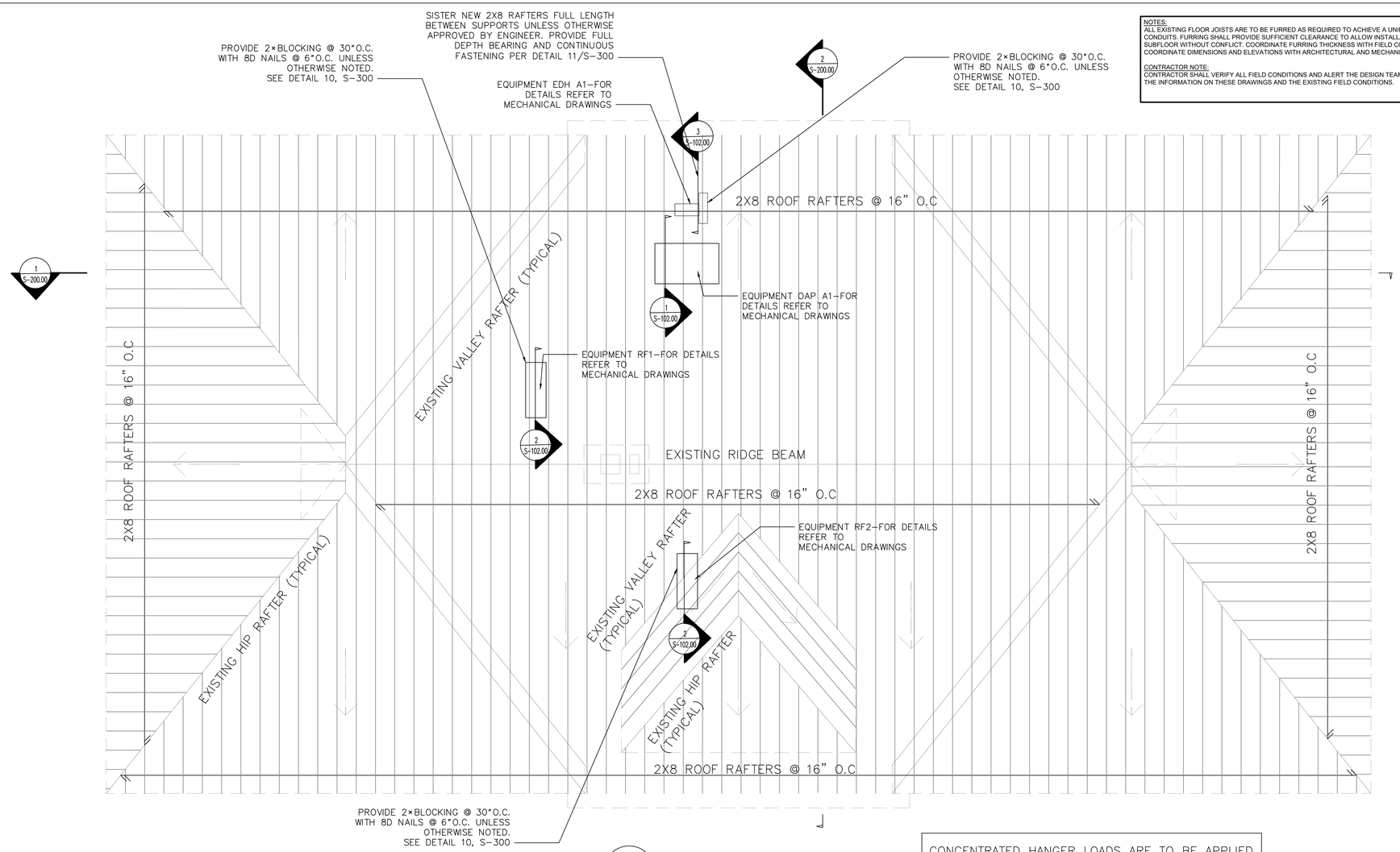

1 / S-200.00 — 2 / S-200.00 — 3 / S-102.00 — 1 / S-102.00 — 2 / S-102.00 — 2 / S-102.00

1 / S102 ROOF FRAMING PLAN
SCALE: 1/4" = 1'-0"

NOTES:
ALL EXISTING FLOOR JOISTS ARE TO BE FURRED AS REQUIRED TO ACHIEVE A UNIFORM ELEVATION ABOVE EXISTING CONDUITS. FURRING SHALL PROVIDE SUFFICIENT CLEARANCE TO ALLOW INSTALLATION OF THE NEW PLYWOOD SUBFLOOR WITHOUT CONFLICT. COORDINATE FURRING THICKNESS WITH FIELD CONDITIONS.
COORDINATE DIMENSIONS AND ELEVATIONS WITH ARCHITECTURAL AND MECHANICAL DRAWINGS

CONTRACTOR NOTE:
CONTRACTOR SHALL VERIFY ALL FIELD CONDITIONS AND ALERT THE DESIGN TEAM TO ALL DISCREPANCIES BETWEEN THE INFORMATION ON THESE DRAWINGS AND THE EXISTING FIELD CONDITIONS.

CONCENTRATED HANGER LOADS ARE TO BE APPLIED ONLY AT LOCATIONS SHOWN ON THIS PLAN. ANY RELOCATION REQUIRES ENGINEER REVIEW.

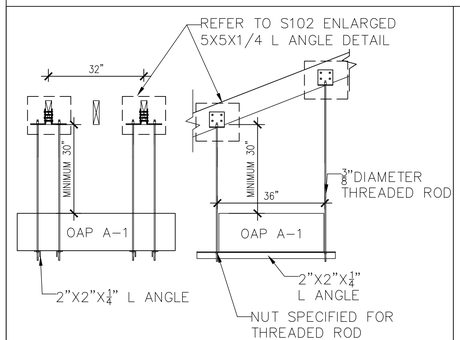

1 HANGERS FOR CEILING SUSPENDED EQUIPMENT OAP A-1
SCALE: 1/2"=1'-0"

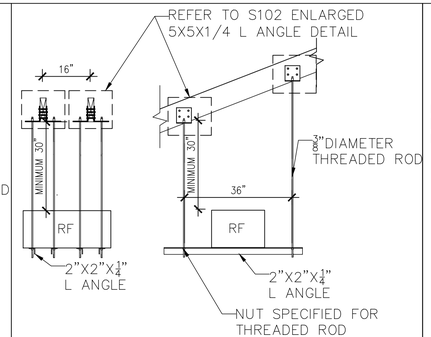

2 HANGERS FOR CEILING SUSPENDED EQUIPMENT RF1 & RF2
SCALE: 1/2"=1'-0"

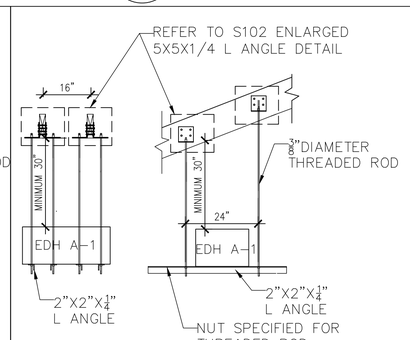

3 HANGERS FOR CEILING SUSPENDED EQUIPMENT EDH A-1
SCALE: 1/2"=1'-0"

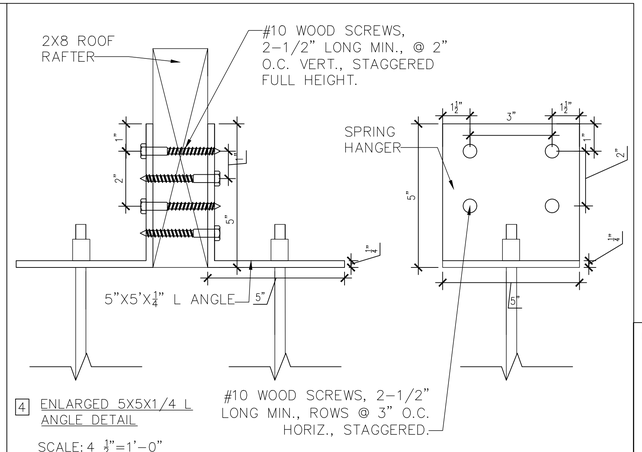

4 ENLARGED 5X5X1/4 L ANGLE DETAIL
SCALE: 4 1/2"=1'-0"

N

DOB APPROVAL STAMP
Md Shahnewaz Piash
APPROVED
Date: 07/09/2026

SPONSOR AGENCY
NYC DEPARTMENT OF CITYWIDE ADMINISTRATIVE SERVICES
53-37 72nd STREET
MASPETH, NY 11378
TEL (212) 669-1357

SPONSOR INSTITUTION
MASPETH TOWN HALL
53-37 72nd STREET
MASPETH, NY 11378
TEL (718) 335-6049

ARCHITECT
ANTHONY JOHNSON ARCHITECT LLC
80 EIGHTH AVENUE
New York, NY 10011
TEL (646) 930-2135

MEP
COLLECTIF ENGINEERING PLLC
27 WEST 20TH STREET
New York, NY 10011
TEL (646) 610-0343

STRUCTURAL ENGINEER
INNOVATIVE STRUCTURAL AND SPECIALTY ENGINEERING PLLC
200 VESEY STREET 24TH FLOOR
New York, NY 10281
TEL (646) 974-1389

REVISIONS:

NUMBER	DESCRIPTION	DATE
	REVISED PER DOB OBJECTIONS	06/29/26
	ISSUE FOR BID	03/27/26

Department of Design and Construction

DIVISION OF PUBLIC BUILDINGS

CAPITAL PROJECT NUMBER:
PWQMAHVAC

PROJECT
MASPETH TOWN HALL HVAC UPGRADE

53-37 72 STREET
QUEENS, NY 11378

FOR THE:
NYC DEPARTMENT OF CITYWIDE ADMINISTRATIVE SERVICES

DRAWING TITLE:
ROOF FRAMING PLAN

SEAL & SIGNATURE
STATE OF NEW YORK — ARSHIA A MAJMUDAR — 083409 — LICENSED PROFESSIONAL ENGINEER

DATE:	06/29/26
PROJECT NO:	####
DRAWN BY:	##
CHECKED BY:	##
DRAWING NUMBER:	S-102.00
NYC DOB NO: Q01357376-I1	5OF9

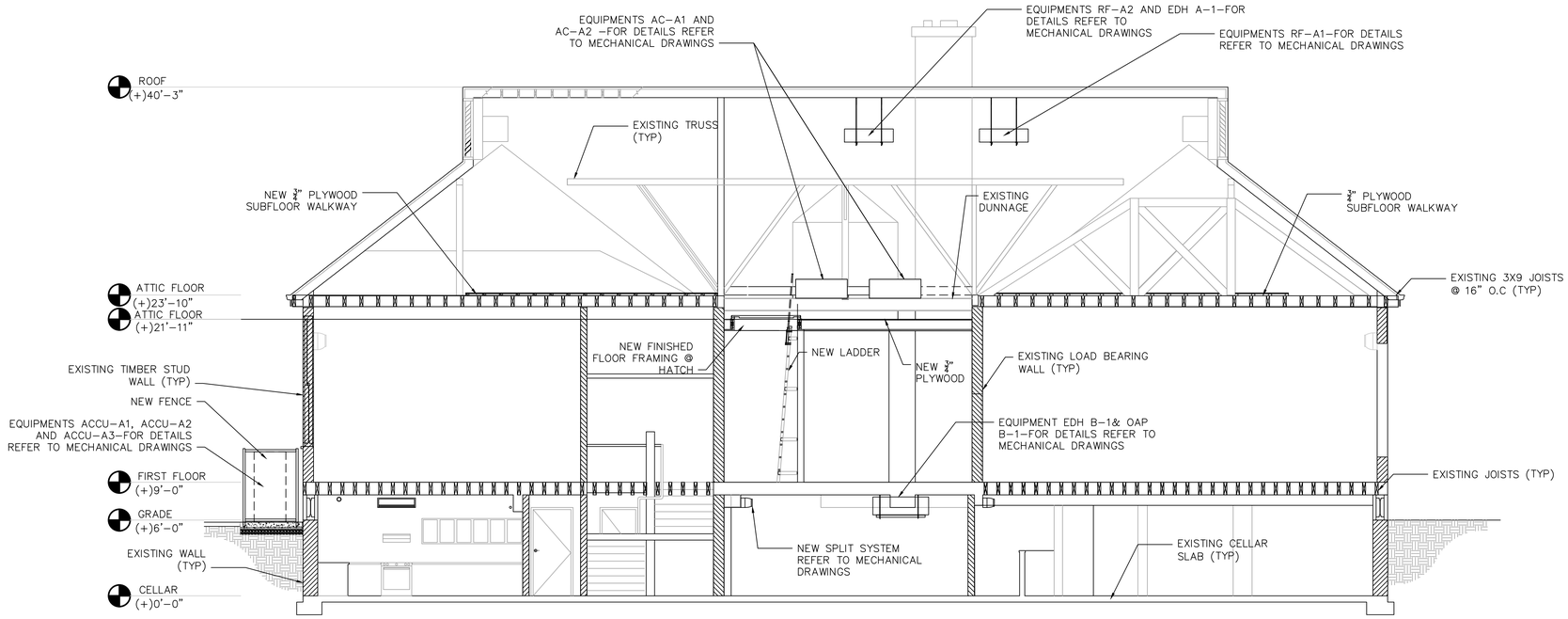

1 S200 SECTION A
SCALE: 3/16" = 1'-0"

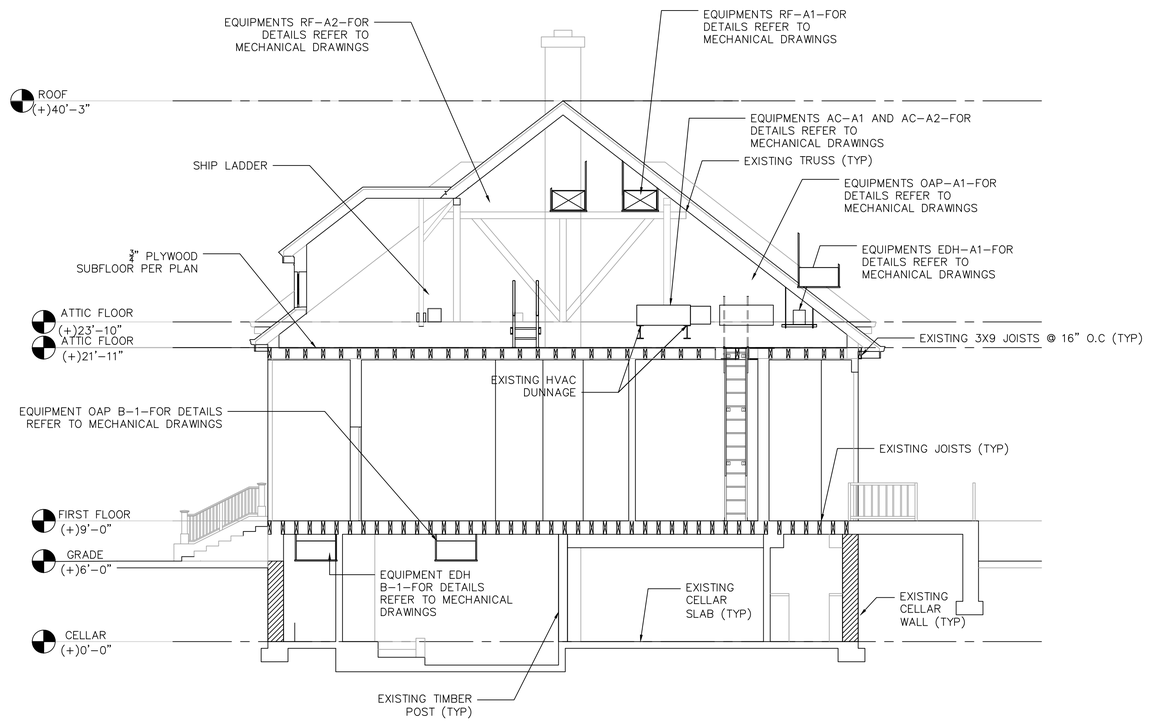

2 S200 SECTION B
SCALE: 3/16" = 1'-0"

DOB APPROVAL STAMP

Md Shahnewaz Piash
APPROVED
Date: 07/09/2026

SPONSOR AGENCY
NYC DEPARTMENT OF CITYWIDE ADMINISTRATIVE SERVICES
53-37 72nd STREET
MASPETH, NY 11378
TEL (212) 669-1357

SPONSOR INSTITUTION
MASPETH TOWN HALL
53-37 72nd STREET
MASPETH, NY 11378
TEL (718) 335-6049

ARCHITECT
ANTHONY JOHNSON ARCHITECT LLC
80 EIGHTH AVENUE
New York, NY 10011
TEL (646) 930-2135

MEP
COLLECTIF ENGINEERING PLLC
27 WEST 20TH STREET
New York, NY 10011
TEL (646) 610-0343

STRUCTURAL ENGINEER
INNOVATIVE STRUCTURAL AND SPECIALTY ENGINEERING PLLC
200 VESEY STREET 24TH FLOOR
New York, NY 10281
TEL (646) 974-1389

REVISIONS:

NUMBER	DESCRIPTION	DATE
	REVISED PER DOB OBJECTIONS	06/29/26
	ISSUE FOR BID	03/27/26

NYC DDC Department of Design and Construction

DIVISION OF PUBLIC BUILDINGS

CAPITAL PROJECT NUMBER:
PWQMAHVAC

PROJECT
MASPETH TOWN HALL HVAC UPGRADE

53-37 72 STREET
QUEENS, NY 11378

FOR THE:
NYC DEPARTMENT OF CITYWIDE ADMINISTRATIVE SERVICES

DRAWING TITLE:
SECTIONS

SEAL & SIGNATURE

STATE OF NEW YORK · RADHI A MAJMUDAR · 083409 · LICENSED PROFESSIONAL ENGINEER

DATE:	06/29/26
PROJECT NO:	####
DRAWN BY:	##
CHECKED BY:	##
DRAWING NUMBER:	S-200.00
NYC DOB NO: Q01357376-I1	6OF9

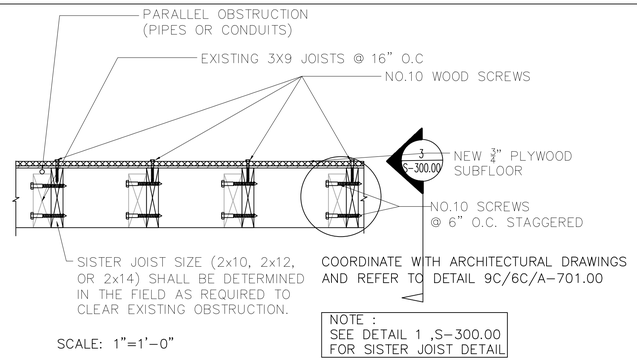

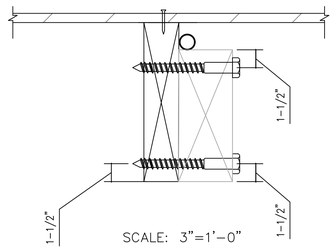

1 PLYWOOD BASE TO FRAMING CONNECTION @ PARALLEL OBSTRUCTION

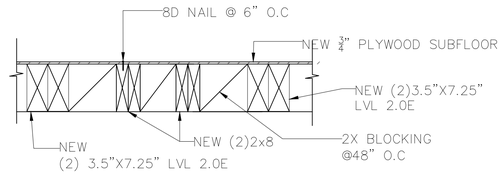

4 BLOCKING AND JOIST REINFORCEMENT DETAIL

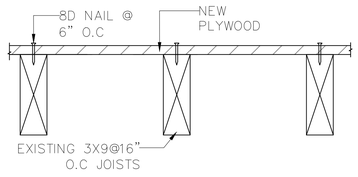

2 TYPICAL ATTIC JOIST

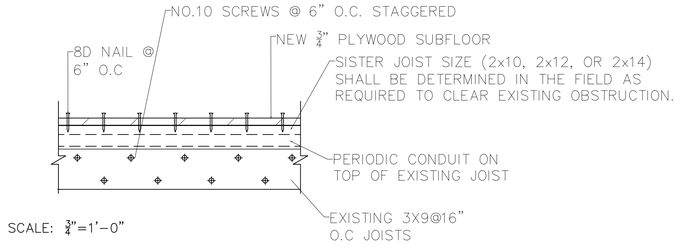

3 ATTIC JOIST @ CONDUIT LOCATION (SIDE VIEW)

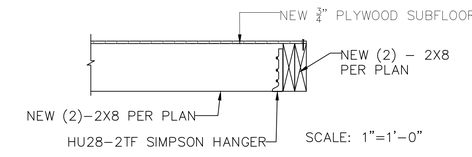

7 NEW (2) 2X8 TO NEW (2) 2"X8" CONNECTION DETAIL

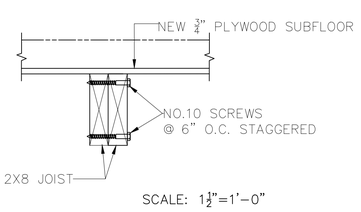

5 SISTER JOIST DETAIL- (2) 2x8 DF-L No.2

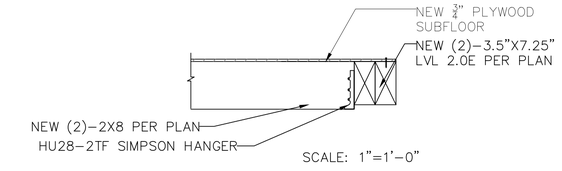

6 NEW (2) 2X8 TO NEW (2) 3.5"X7.25" LVL 2.0E CONNECTION DETAIL

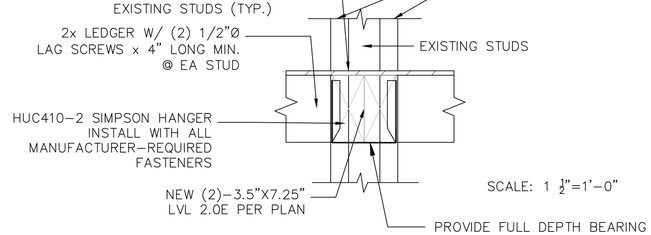

8 LVL JOIST TO STUD WALL CONNECTION DETAIL (FRONT VIEW)

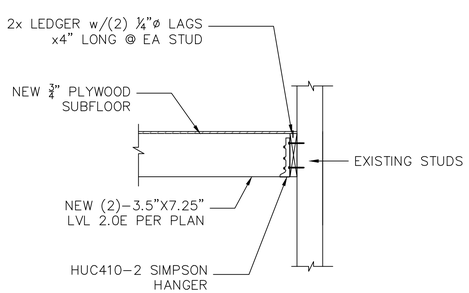

9 LVL JOIST TO STUD WALL CONNECTION DETAIL (SIDE VIEW)

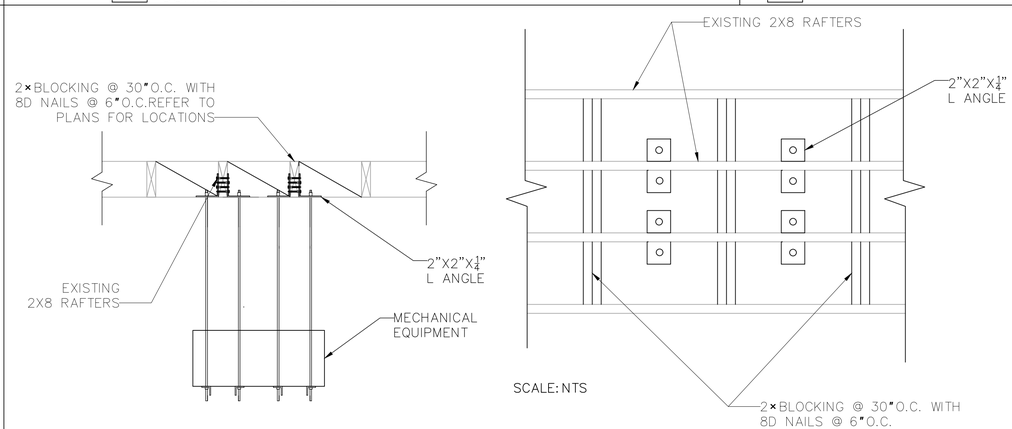

10 RAFTERS BLOCKING DETAIL AT HANGER LOCATIONS

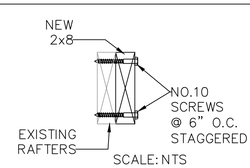

11 TYPICAL RAFTER SISTERING DETAIL

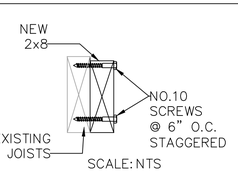

12 TYPICAL JOIST SISTERING DETAIL

DOB APPROVAL STAMP

Md Shahnewaz Piash
APPROVED
Date: 07/09/2026

SEAL & SIGNATURE

SPONSOR AGENCY
NYC DEPARTMENT OF CITYWIDE ADMINISTRATIVE SERVICES
53-37 72nd STREET
MASPETH, NY 11378
TEL (212) 669-1357

SPONSOR INSTITUTION
MASPETH TOWN HALL
53-37 72nd STREET
MASPETH, NY 11378
TEL (718) 335-6049

ARCHITECT
ANTHONY JOHNSON ARCHITECT LLC
80 EIGHTH AVENUE
New York, NY 10011
TEL (646) 930-2135

MEP
COLLECTIF ENGINEERING PLLC
27 WEST 20TH STREET
New York, NY 10011
TEL (646) 610-0343

STRUCTURAL ENGINEER
INNOVATIVE STRUCTURAL AND SPECIALTY ENGINEERING PLLC
200 VESEY STREET 24TH FLOOR
New York, NY 10281
TEL (646) 974-1389

REVISIONS:

NUMBER	DESCRIPTION	DATE
	REVISED PER DOB OBJECTIONS	06/29/26
	ISSUE FOR BID	03/27/26

Department of Design and Construction

DIVISION OF PUBLIC BUILDINGS

CAPITAL PROJECT NUMBER:
PWQMAHVAC

PROJECT
MASPETH TOWN HALL HVAC UPGRADE

53-37 72 STREET
QUEENS, NY 11378

FOR THE:
NYC DEPARTMENT OF CITYWIDE ADMINISTRATIVE SERVICES

DRAWING TITLE:
DETAILS 1

DATE:	06/29/26
PROJECT NO:	####
DRAWN BY:	##
CHECKED BY:	##
DRAWING NUMBER:	**S-300.00**
NYC DOB NO: Q01357376-I1	7OF9

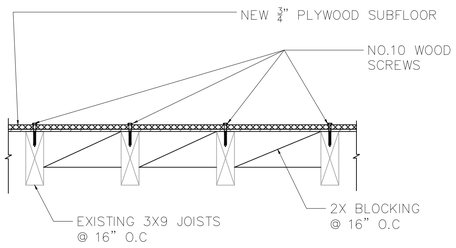

SCALE: 1"=1'-0"

1 PLYWOOD BASE TO FRAMING CONNECTION

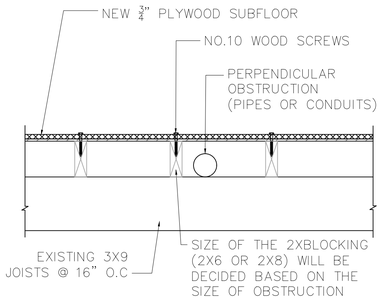

SCALE: 1"=1'-0"

COORDINATE WITH ARCHITECTURAL DRAWINGS AND REFER TO DETAIL 9B/6B/A-701.00

2 PLYWOOD BASE TO FRAMING CONNECTION @ PERPENDICULAR OBSTRUCTION

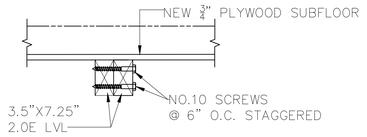

SCALE: 1½"=1'-0"

3 LVL SISTER JOIST DETAIL -(2) 3½"x 7¼" 2.0E

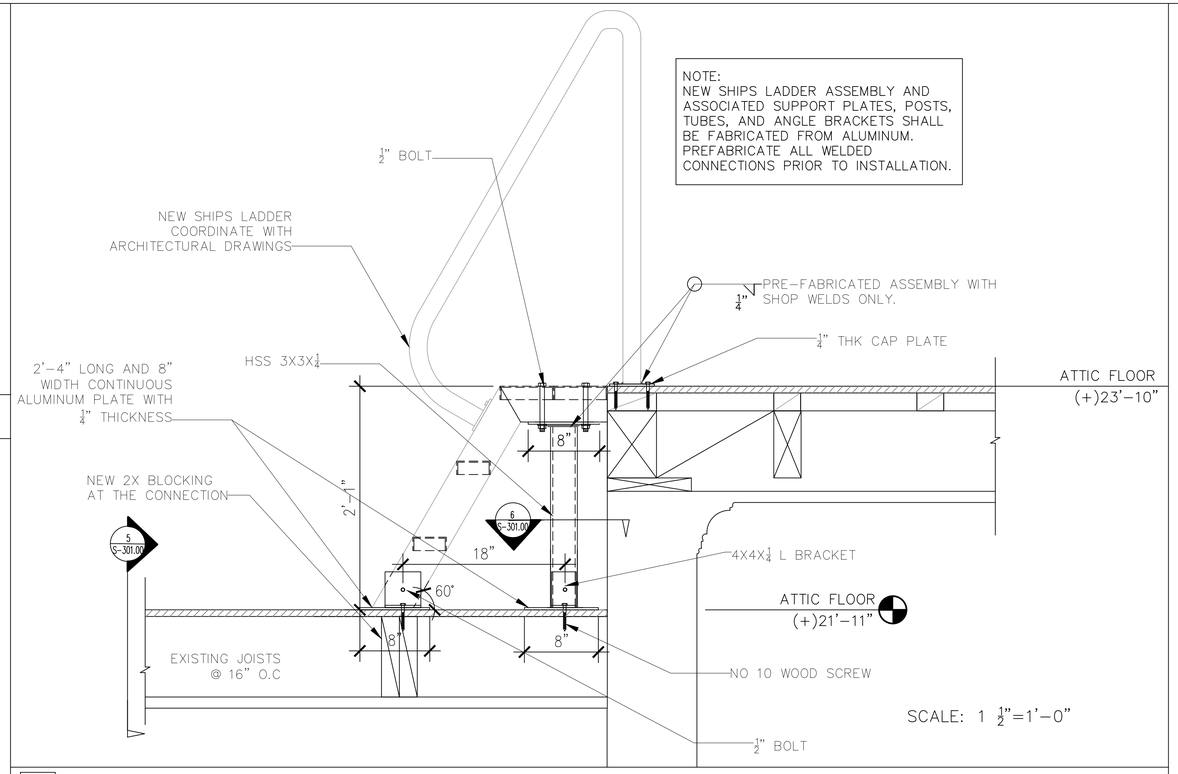

4 NEW SHIPS LADDER CONNECTIONS

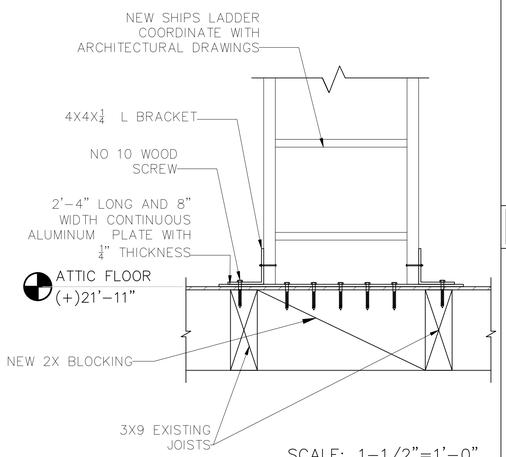

5 NEW SHIPS LADDER CONNECTIONS AT ATTIC FLOOR

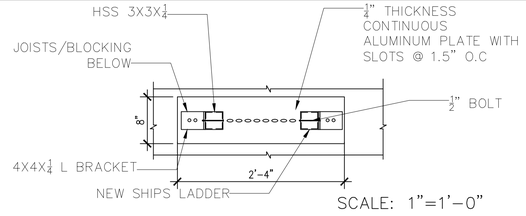

6 TOP VIEW OF THE SHIPS LADDER SUPPORTING POSTS

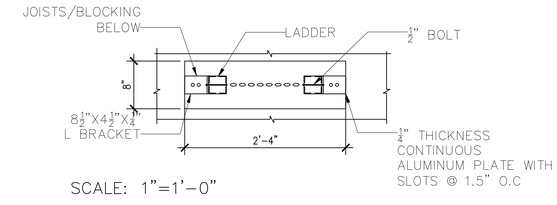

7 TOP VIEW OF THE LADDER SUPPORTED ON FIRST FLOOR

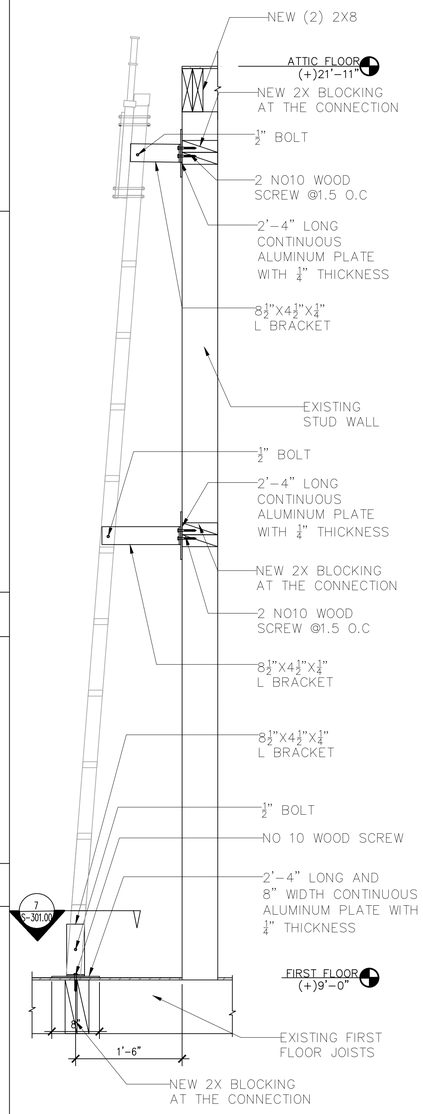

8 LADDER TO WALL L-BRACKET CONNECTION

DOB APPROVAL STAMP

NYC

Md Shahnewaz Piash
APPROVED
Date: 07/09/2026

SPONSOR AGENCY
NYC DEPARTMENT OF CITYWIDE ADMINISTRATIVE SERVICES
53-37 72nd STREET
MASPETH, NY 11378
TEL (212) 669-1357

SPONSOR INSTITUTION
MASPETH TOWN HALL
53-37 72nd STREET
MASPETH, NY 11378
TEL (718) 335-6049

ARCHITECT
ANTHONY JOHNSON ARCHITECT LLC
80 EIGHTH AVENUE
New York, NY 10011
TEL (646) 930-2135

MEP
COLLECTIF ENGINEERING PLLC
27 WEST 20TH STREET
New York, NY 10011
TEL (646) 610-0343

STRUCTURAL ENGINEER
INNOVATIVE STRUCTURAL AND SPECIALTY ENGINEERING PLLC
200 VESEY STREET 24TH FLOOR
New York, NY 10281
TEL (646) 974-1389

REVISIONS:

NUMBER	DESCRIPTION	DATE
	REVISED PER DOB OBJECTIONS	06/29/26
	ISSUE FOR BID	03/27/26

Department of Design and Construction

DIVISION OF PUBLIC BUILDINGS

CAPITAL PROJECT NUMBER:
PWQMAHVAC

PROJECT
MASPETH TOWN HALL HVAC UPGRADE

53-37 72 STREET
QUEENS, NY 11378

FOR THE:
NYC DEPARTMENT OF CITYWIDE ADMINISTRATIVE SERVICES

DRAWING TITLE:
DETAILS 2

SEAL & SIGNATURE

STATE OF NEW YORK · RASHI A MAJMUNDAR · 083409 · LICENSED PROFESSIONAL ENGINEER

DATE:	06/29/26
PROJECT NO:	####
DRAWN BY:	##
CHECKED BY:	##
DRAWING NUMBER:	**S-301.00**
NYC DOB NO: Q013573761	8OF9

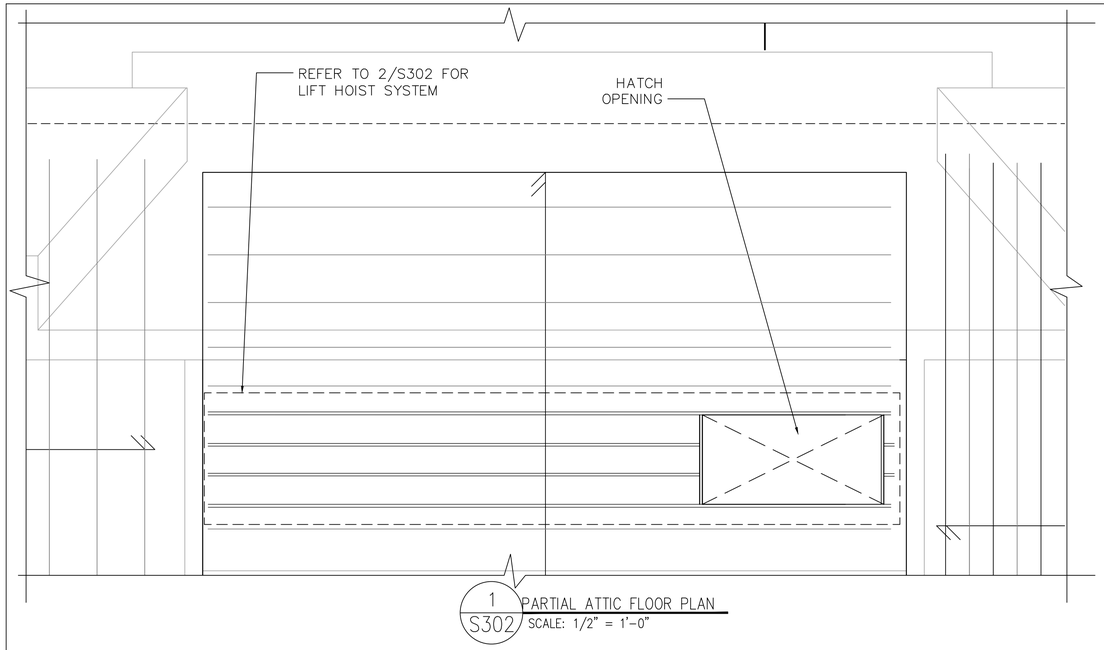

1 / S302 PARTIAL ATTIC FLOOR PLAN
SCALE: 1/2" = 1'-0"

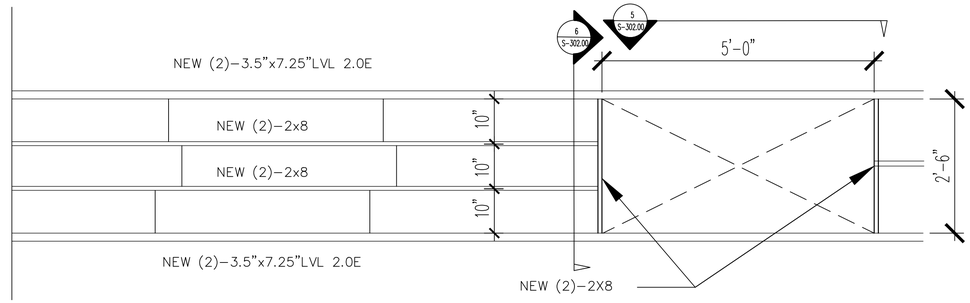

2 / S302 PROVIDE NEW (2) 2X8 JOISTS IN 10" SPACING BETWEEN 2 LVL JOISTS
SCALE: 3/4" = 1'-0"

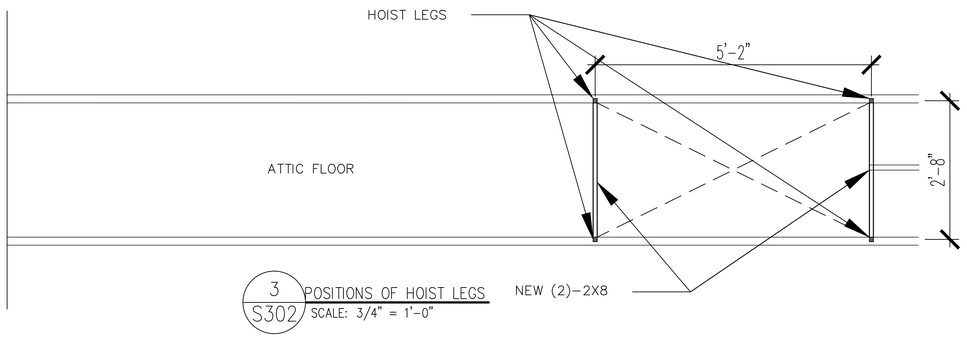

3 / S302 POSITIONS OF HOIST LEGS
SCALE: 3/4" = 1'-0"

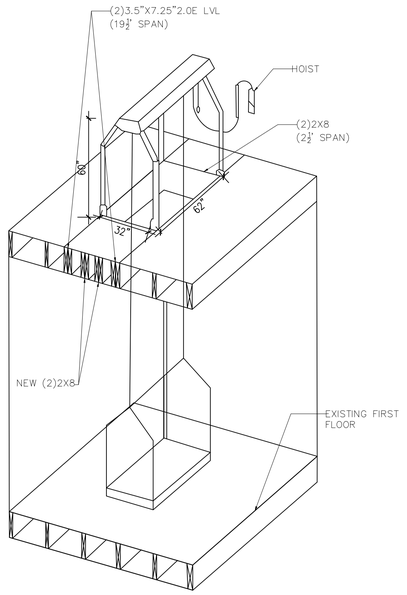

SCALE: 3/4"=1'-0"

4 LIFT SYSTEM WITH SHORING

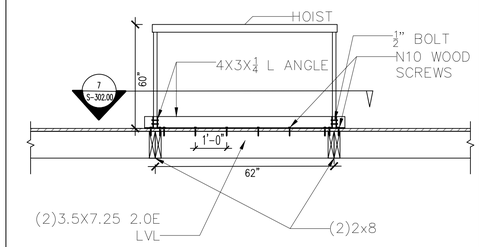

SCALE: 1/2"=1'-0"

5 LIFT SYSTEM – SIDE VIEW

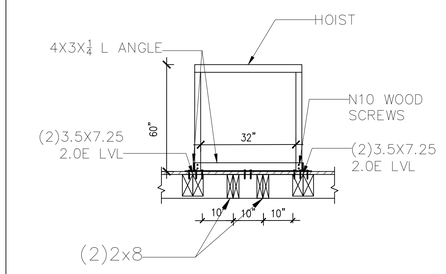

SCALE: 1/2"=1'-0"

6 LIFT SYSTEM – FRONT VIEW

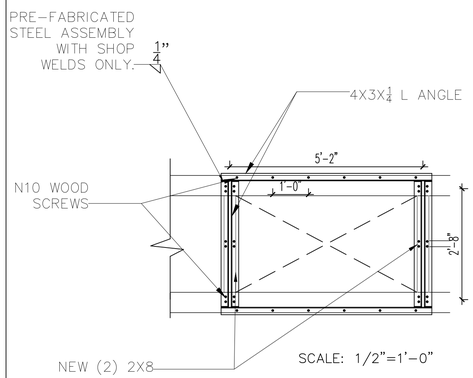

SCALE: 1/2"=1'-0"

7 LIFT SYSTEM – TOP VIEW

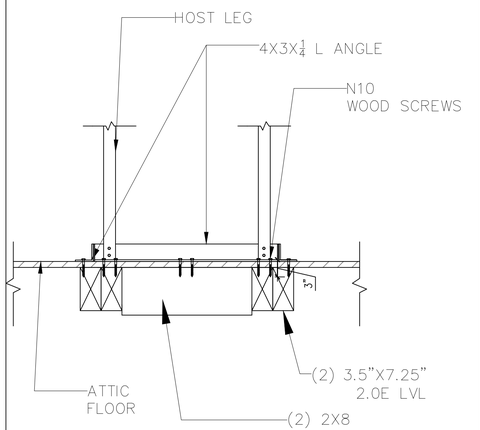

MINIMUM EMBEDMENT DEPTH SHOULD BE 2"

SCALE: 1"=1'-0"

8 LIFT SYSTEM – SIDE VIEW

DETAILS INDICATE TEMPORARY HOIST AND SHORING SYSTEM FOR EQUIPMENT LIFTING AND FLOOR OPENING SUPPORT. CONTRACTOR SHALL VERIFY FIELD CONDITIONS AND SUBMIT SHOP DRAWINGS FOR REVIEW PRIOR TO INSTALLATION.
HOIST INTENDED LOAD CAPACITY: DESIGNED FOR 300 LB MECHANICAL UNITS (TYPICAL).
DURATION OF USE IS TEMPORARY, TO BE REMOVED AFTER EQUIPMENT PLACEMENT.
TO SUPPLEMENT WHAT IS SHOWN, THE CONTRACTOR SHALL PROVIDE MEANS AND METHODS IN COMPLIANCE WITH OSHA 1926 AND NYC BUILDING CODE §3314.
ALL SHORING COMPONENTS SHALL BE NEW OR IN GOOD CONDITION, FREE OF DEFECTS, RUST, OR BENDS.
NO CUTTING, NOTCHING, OR DRILLING OF EXISTING STRUCTURAL MEMBERS IS PERMITTED WITHOUT WRITTEN APPROVAL FROM THE STRUCTURAL ENGINEER.
CONTRACTOR SHALL ENSURE THAT ALL SHORING IS BRACED TO PREVENT LATERAL MOVEMENT OR BUCKLING.

DOB APPROVAL STAMP
Md Shahnewaz Piash
APPROVED
Date: 07/09/2026

SPONSOR AGENCY
NYC DEPARTMENT OF CITYWIDE ADMINISTRATIVE SERVICES
53-37 72nd STREET
MASPETH, NY 11378
TEL (212) 669-1357

SPONSOR INSTITUTION
MASPETH TOWN HALL
53-37 72nd STREET
MASPETH, NY 11378
TEL (718) 335-6049

ARCHITECT
ANTHONY JOHNSON ARCHITECT LLC
80 EIGHTH AVENUE
New York, NY 10011
TEL (646) 930-2135

MEP
COLLECTIF ENGINEERING PLLC
27 WEST 20TH STREET
New York, NY 10011
TEL (646) 610-0343

STRUCTURAL ENGINEER
INNOVATIVE STRUCTURAL AND SPECIALTY ENGINEERING PLLC
200 VESEY STREET 24TH FLOOR
New York, NY 10281
TEL (646) 974-1389

REVISIONS:

NUMBER	DESCRIPTION	DATE
	REVISED PER DOB OBJECTIONS	06/29/26
	ISSUE FOR BID	03/27/26

Department of Design and Construction

DIVISION OF PUBLIC BUILDINGS

CAPITAL PROJECT NUMBER:
PWQMAHVAC

PROJECT
MASPETH TOWN HALL HVAC UPGRADE

53-37 72 STREET
QUEENS, NY 11378

FOR THE:
NYC DEPARTMENT OF CITYWIDE ADMINISTRATIVE SERVICES

DRAWING TITLE:
TEMPORARY HOIST SYSTEM

SEAL & SIGNATURE
STATE OF NEW YORK · MARIA A MAJMUDAR · 083405 · LICENSED PROFESSIONAL ENGINEER

DATE:	06/29/26
PROJECT NO:	####
DRAWN BY:	##
CHECKED BY:	##
DRAWING NUMBER:	S-302.00
NYC DOB NO: Q01357376-I1	9OF9