GENERAL SPRINKLER NOTES

1. CONTRACTOR SHALL VERIFY ALL DIMENSIONS AND JOB CONDITIONS AND SHALL REPORT TO ENGINEER ANY DISCREPANCIES OR OMISSIONS THAT WOULD INTERFERE WITH SATISFACTORY COMPLETION OF THE WORK.
2. CONTRACTOR SHALL COORDINATE THE FIRE PROTECTION SYSTEM WITH WORK OF ALL OTHER TRADES PRIOR TO ANY FABRICATION OR INSTALLATION. CONTRACTOR SHALL PROVIDE ALL FITTINGS, OFFSETS, AND TRANSITIONS AS REQUIRED FOR A COMPLETE WORKABLE INSTALLATION.
3. THE CONTRACTOR SHALL BE RESPONSIBLE FOR REVIEWING A FULL SET OF BID DOCUMENTS TO MAKE THEMSELVES AWARE OF THE TOTAL JOB BEFORE SUBMITTING THEIR PRICE. CONTRACTOR SHALL BE RESPONSIBLE FOR ARRANGING WITH FACILITY'S BUILDING MANAGEMENT FOR HANDLING MATERIALS, AS WELL AS FOR ALLOWABLE WORKING HOURS AND DELIVERIES.
4. CONTRACTOR SHALL NOTIFY BUILDING MANAGER AT LEAST 48 HOURS BEFORE NEW WORK OR BEFORE SHUT DOWN OF EXISTING SERVICES.
5. CONTRACTOR SHALL SUBMIT ALL SHOP DRAWINGS AND MANUFACTURERS' CUTS AND SAMPLES TO ARCHITECT PRIOR TO COMMENCEMENT OF SUCH WORK.
6. THE CONTRACTOR SHALL INDICATE ON THEIR SHOP DRAWING THAT ALL PIPING LAYOUTS ARE COORDINATED WITH THE MEP AND STRUCTURAL CONDITIONS. CONTRACTOR SHALL INCLUDE ON EACH WORKING DRAWING LAYOUT CERTIFICATE THAT ALL RELATED CONDITIONS HAVE BEEN CHECKED, AND THAT NO CONFLICT EXISTS, SUBMISSION WILL NOT BE APPROVED WITHOUT SUCH CERTIFICATION.
7. CONTRACTOR SHALL SUBMIT SPRINKLER HYDRAULIC CALCULATIONS FOR THE ENGINEER'S REVIEW AND APPROVAL TO VERIFY THE ADEQUACY OF THE INDICATED PIPE SIZES.
8. DRAWINGS ARE NOT TO BE SCALED.
9. CONTRACTOR SHALL COMPLY WITH ALL CITY BUILDING DEPARTMENT AND REGULATORY AGENCIES AND CODE REQUIREMENTS. CONTRACTOR SHALL BE RESPONSIBLE FOR SECURING ALL NECESSARY PERMITS AND APPROVALS OF ALL TRADES.
10. CONTRACTOR SHALL EXERCISE EXTREME CARE IN PROTECTING AREAS ADJACENT TO CONSTRUCTION AREAS, CONTRACTOR SHALL FULLY PROTECT THEM FROM ANY DAMAGE RESULTING FROM THE CONTRACTOR'S TEAM, SUBCONTRACTORS OR AGENTS, AND SHALL BE RESPONSIBLE FOR REPAIRING, CLEANING OR REPLACING ANY SUCH DAMAGE.
11. ALL DIMENSIONS GIVEN ARE FINISH DIMENSIONS UNLESS OTHERWISE STATED.
12. UNLESS SPECIFICALLY STATED OTHERWISE, CONTRACTOR SHALL FURNISH ALL LABOR, MATERIALS, APPURTENANCES, EQUIPMENT AND SERVICES TO COMPLETE ALL WORK AS INDICATED ON DRAWINGS AND/OR SPECIFIED ON NOTES.
13. UNLESS SPECIFICALLY STATED OTHERWISE, CONTRACTOR SHALL FOLLOW MANUFACTURER'S DIRECTIONS, INSTRUCTIONS AND RECOMMENDATIONS FOR ALL MATERIALS AND PROCESSES USED IN THIS CONTRACT.
14. CONTRACTOR SHALL RELOCATE ALL EXISTING SPRINKLER MAIN AND BRANCH PIPING IN THE AREA OF WORK THAT IS IN CONFLICT WITH THE LIGHTING FIXTURES AND HVAC DUCTWORK.
15. SPRINKLER HEADS SHALL NOT BE LOCATED DIRECTLY OVER ANY ELECTRICAL OR TELEPHONE EQUIPMENT.
16. SPRINKLER PIPING SHALL BE INSTALLED AS PER APPROVED SHOP DRAWINGS.
17. CONTRACTOR SHALL BASE ALL HYDRAULIC CALCULATIONS ON THE AVAILABLE PRESSURE AND WATER FLOW DATA AT EXISTING FLOOR CONTROL ASSEMBLY.
18. EACH CONTRACTOR IS RESPONSIBLE TO PROVIDE ALL PENETRATIONS, CUTTING, PATCHING, SLEEVES, AND FIRESTOPPING REQUIRED TO COMPLETE THE INSTALLATION OF ALL WORK INCLUDED UNDER THEIR CONTRACT IN ACCORDANCE WITH THE FIRE EGRESS AND SECURITY PLAN DRAWINGS.
19. CONTRACTOR SHALL LOCATE ALL HORIZONTAL PIPING ABOVE SUSPENDED CEILING, UNLESS THERE IS NO CEILING.
20. CONTRACTOR SHALL PROVIDE SPRINKLER HEADS UNDER DUCTS AND OTHER OBSTRUCTIONS OVER 4'-0" IN WIDTH IN AREAS WITHOUT HUNG CEILING.
21. UPON COMPLETION OF THE WORK, CONTRACTOR SHALL COMPLETELY CLEAN THE CONSTRUCTION AREA TO MAKE SUITABLE FOR THE OWNER'S USE. THIS INCLUDES REMOVING ALL LABELS (AFTER ARCHITECT'S INSPECTION) AND CLEANING ALL EQUIPMENT, CONSTRUCTION WORK, WINDOWS AND ANY OTHER NEW AND OLD WORK IN THAT CONSTRUCTION AREA.
22. CONTRACTOR SHALL PROVIDE ALL FITTINGS AND PIPING REQUIRED TO MODIFY EXISTING SPRINKLER MAIN TO ALLOW FOR INSTALLATION OF HVAC DUCT WORK AND LIGHTING FIXTURES.
23. THE MINIMUM SPRINKLER BRANCH PIPE SIZE SHALL BE 1".
24. SPRINKLER HEADS SHALL BE ± 1/2" FROM CENTER OF TILE. CONTRACTOR SHALL ALLOW FOR ALL REQUIRED FITTINGS TO ACHIEVE THIS GOAL AND INCLUDE IT IN THEIR CONTRACT PRICE.

GENERAL PROJECT NOTES

SCOPE OF WORK

1. MODIFICATIONS TO AN EXISTING WET & DRY SPRINKLER SYSTEMS TO ACCOMMODATE WORK PERFORMED IN THE CELLAR, 1ST FLOOR AND ATTIC, WHICH INCLUDES BUT NOT LIMITED TO THE INSTALLATION OF A NEW ATTIC ACCESS HATCH, MECHANICAL EQUIPMENT, DUCTWORK MODIFICATIONS AND REFINISHING OF FLOOR. THERE'S NO CHANGE IN USE OR EGRESS.

OUT OF SERVICE SYSTEMS - NYC FIRE CODE SECTION 901.7

1. IN ACCORDANCE WITH THE NYC FIRE CODE, SECTION 901.7 WHEN EITHER A FIRE STANDPIPE SYSTEM OR SPRINKLER SYSTEM IS TAKEN OUT OF SERVICE THE CONTRACTOR SHALL NOTIFY THE FIRE DEPARTMENT IMMEDIATELY AND A FIRE WATCH SHALL BE MAINTAINED BY ONE OR MORE PERSONS HOLDING A CERTIFICATE OF FITNESS FOR FIRE GUARD UNTIL THE FIRE PROTECTION SYSTEM HAS BEEN RETURNED TO SERVICE. FIRE GUARDS SHALL BE PROVIDED WITH AT LEAST ONE APPROVED MEANS FOR NOTIFICATION OF THE FIRE DEPARTMENT AND THEIR ONLY DUTY SHALL BE TO PERFORM CONSTANT PATROLS OF THE PROTECTED PREMISES AND KEEP WATCH FOR FIRE.

SPECIAL INSPECTIONS:

1. SPRINKLER SYSTEMS - (NYC BUILDING CODE, CHAPTER 17, PARA. 1704.23)
NEW AND ALTERED SPRINKLER SYSTEMS SHALL BE INSPECTED IN ACCORDANCE WITH NYC BUILDING CODE SECTION 903. THIS CONTRACTOR OR PERMIT HOLDER FOR THE SPRINKLER WORK SHALL PERFORM ALL REQUIRED ACCEPTANCE TESTS, COMPLETE AND SIGN THE APPROPRIATE CONTRACTOR'S MATERIAL AND TEST CERTIFICATES. THE SPECIAL INSPECTOR SHALL WITNESS ALL REQUIRED TESTS AND SHALL VERIFY THAT ALL INSTALLATIONS OF ALL MATERIALS, FITTINGS, HANGERS, ASSEMBLIES AND SIGNAGE ARE IN ACCORDANCE WITH THE APPROVED CONSTRUCTIONS DOCUMENTS AND THE CONTRACTOR HAS TRANSMITTED REQUIRED MAINTENANCE LITERATURE AND INSTRUCTIONS TO THE OWNER. THE SPECIAL INSPECTOR SHALL VERIFY THE MATERIAL AND TEST CERTIFICATION FORMS HAVE BEEN TRANSMITTED TO THE FIRE DEPARTMENT AND THE DEPARTMENT OF BUILDINGS.

SPRINKLER LEGEND

———	EX. PIPING TO REMAIN
—X—X—	SPRINKLER PIPING TO BE REMOVED
———	SPRINKLER PIPING
—○	UP TO FROM ABOVE
—⊃	DOWN OR FROM BELOW
⊠	EX. SPRINKLER TO BE REMOVED
○E	EX. UPRIGHT SPRINKLER TO REMAIN
○EP	EX. PENDENT SPRINKLER TO REMAIN
●E	EX. PENDENT SPRINKLER WITH ESCUTCHEON TO REMAIN
◁E	EX. SIDEWALL SPRINKLER TO REMAIN
◁ES	EX. SIDEWALL SPRINKLER EXPOSED BELOW SOFFIT TO REMAIN
○	UPRIGHT SPRINKLER
○P	PENDENT SPRINKLER
○U	UNDER DUCT UPRIGHT SPRINKLER WITH CAGE
●	PENDENT SPRINKLER WITH ESCUTCHEON
◁	SIDEWALL SPRINKLER
	EX. CHECK VALVE
—□ TS	EX. TAMPER SWITCH
TS	EX. OS&Y CONTROL VALVE WITH TS
DCDA	EX. DOUBLE CHECK DETECTOR ASSEMBLY
DPS	DRY PIPE SYSTEM
DPV	EX. DRY PIPE VALVE
DR	DRAIN
EX	EXISTING
NIC	NOT IN CONTRACT
NTS	NOT TO SCALE
OS&Y	OUTSIDE SCREW & YOKE
SP	SPRINKLER

DRAWING NOTATIONS

	POINT OF NEW CONNECTION TO EXISTING WORK
	POINT OF DISCONNECTION FROM EXISTING WORK
1	REVISION SYMBOL

SPRINKLER DRAWING LIST

Sheet Title	Sheet Description
SP-001.00	SPRINKLER NOTES, SYMBOLS & ABBREVIATIONS
SP-101.00	SPRINKLER CELLAR PLAN
SP-102.00	SPRINKLER 1ST FLOOR PLAN
SP-103.00	SPRINKLER ATTIC PLAN
SP-501.00	SPRINKLER DETAILS
SP-601.00	SPRINKLER RISER DIAGRAM

SPECIAL INSPECTIONS (TR-1):

SPINKLER SYSTEMS — BC 1704.23

DOB APPROVAL STAMP

NYC Buildings
ACCEPTED
Date: 06/09/2026

SPONSOR AGENCY
NYC DEPARTMENT OF CITYWIDE ADMINISTRATIVE SERVICES
53-37 72nd STREET
MASPETH, NY 11378
TEL (212) 669-1357

SPONSOR INSTITUTION
MASPETH TOWN HALL
53-37 72nd STREET
MASPETH, NY 11378
TEL (718) 335-6049

ARCHITECT
ANTHONY JOHNSON ARCHITECT LLC
80 EIGHTH AVENUE
New York, NY 10011
TEL (646) 930-2135

MEP
COLLECTIF ENGINEERING PLLC
27 WEST 20TH STREET
New York, NY 10011
TEL (646) 610-0343

STRUCTURAL ENGINEER
INNOVATIVE STRUCTURAL AND SPECIALTY ENGINEERING PLLC
140 BROADWAY
New York, NY 10005
TEL (646) 974-1389

REVISIONS:

NUMBER	DESCRIPTION	DATE
1	DD SET	9/22/25
2	75% CD	11/17/25
3	100% CD	01/12/26

Department of Design and Construction

DIVISION OF PUBLIC BUILDINGS

CAPITAL PROJECT NUMBER:
PWQMAHVAC

PROJECT
MASPETH TOWN HALL HVAC UPGRADE

53-37 72 STREET
QUEENS, NY 11378

FOR THE:
DCAS

DOB NOW #Q01356625-I1

DRAWING TITLE:
SPRINKLER NOTES, SYMBOLS & ABBREVIATIONS

SEAL & SIGNATURE
STATE OF NEW YORK · BENJAMIN DOUGLAS FRAM · 099745 · LICENSED PROFESSIONAL ENGINEER

DATE:	9/22/25
PROJECT NO:	2430
DRAWN BY:	FP
CHECKED BY:	FP
DRAWING NUMBER:	SP-001.00
CADO FILE No:	1 OF 6

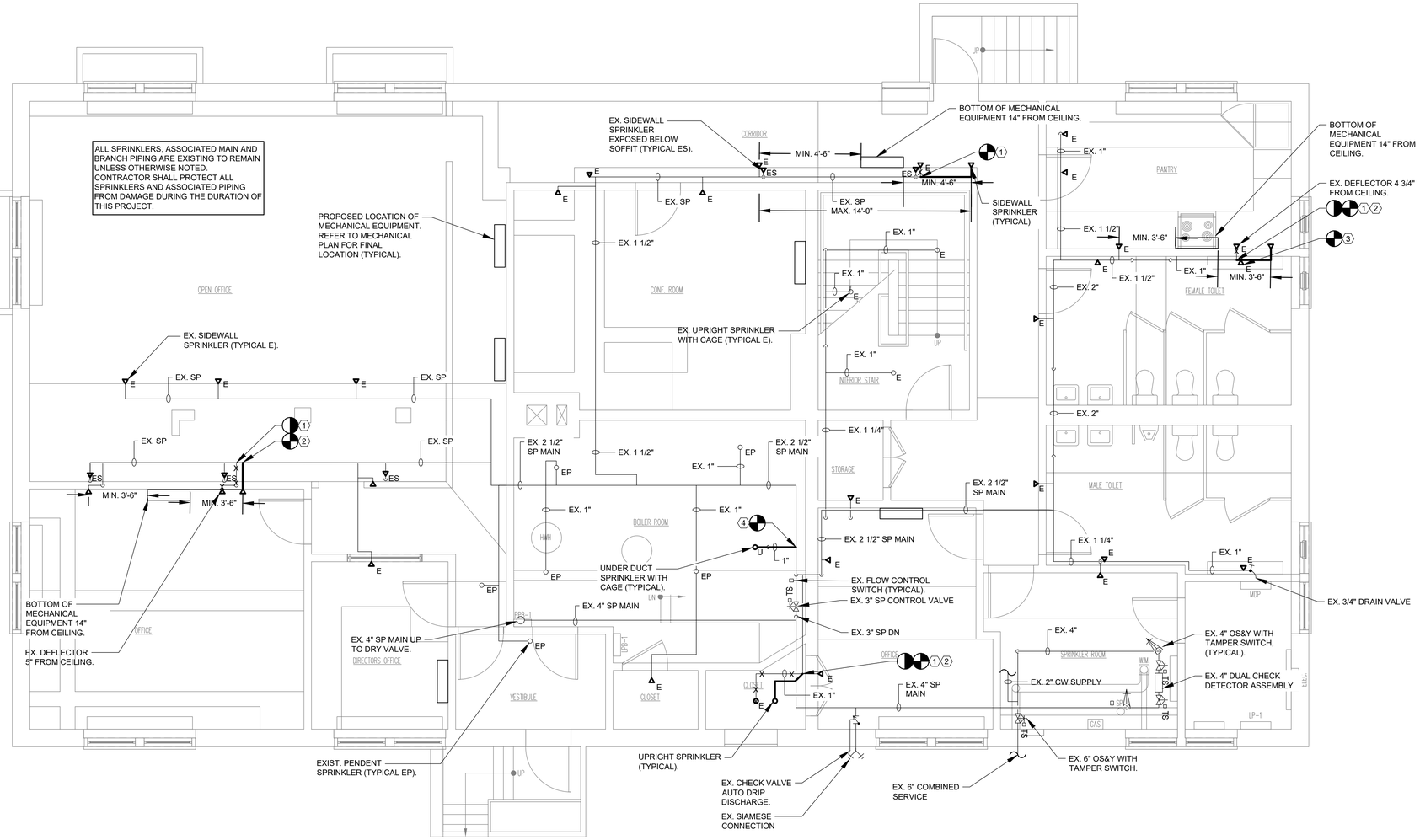

1 SPRINKLER CELLAR PLAN
Scale: 1/4"=1' 0"

GENERAL NOTES

1. FOR SYMBOLS, LEGEND, AND NOTES REFER TO DRAWING SP-001.00
2. FOR SPECIFICATIONS REFER TO BOOK SPECIFICATIONS.
3. FOR DETAILS REFER TO DRAWINGS SP-501.00.
4. FOR SPRINKLER FLOOR PLANS REFER TO DRAWINGS SP-101.00 & SP-102.00.
4. FOR SPRINKLER RISER DIAGRAM REFER TO DRAWING SP-601.00.
5. ALL SPRINKLER WORK SHALL BE INSTALLED IN ACCORDANCE WITH 2022 NYC BUILDING CODE, NFPA-13-2016 AS MODIFIED BY APPENDIX Q OF THE NYC BUILDING CODE AND ALL OTHER AUTHORITIES HAVING JURISDICTION.
6. ALL SPRINKLER WORK SHALL BE COORDINATED WITH ALL NEW AND EXISTING WORK OF OTHER TRADES.
7. CONTRACTOR TO PROVIDE FIRE WATCH WHENEVER THE SPRINKLER SYSTEM IS TAKEN OFFLINE/OUT OF SERVICE. THE SYSTEM SHALL BE BROUGHT BACK ONLINE/IN SERVICE AT THE END OF EACH WORK DAY.
8. CONTRACTOR SHALL COORDINATE THE REMOVAL AND INSTALLATION OF SPRINKLERS AND ASSOCIATED PIPING WITH PHASING OF ALL OTHER WORK TO BE PERFORMED UNDER THIS PROJECT.
9. ALL NEW SPRINKLERS SHALL MATCH MAKE AND MODEL OF THE EXISTING TO REMAIN SPRINKLERS.
10. ALL INTERIOR/EXTERIOR FINISHES AFFECTED BY THE PROPOSED SPRINKLER WORK SHALL BE RESTORED TO MATCH EXISTING.

KEY NOTES

(1) DISCONNECT AND REMOVE EXISTING SPRINKLER AND ASSOCIATED PIPING BACK TO ACTIVE BRANCH. TEMPORARILY CAP/PLUG ALL RESULTING ACTIVE OUTLETS FOR CONNECTION OF PIPING AND SPRINKLERS. ISOLATED SPRINKLER REMOVAL AND INSTALLATION WORK SHALL OCCUR IN THE SAME DAY TO PROTECT THE INTEGRITY OF THE SYSTEM AND ALLOW FOR RE-ENERGIZING OF THE WHOLE SYSTEM AT THE END OF EACH WORK DAY.

(2) CONNECT AND EXTEND A 1" PIPE FROM THE TEMPORARILY CAPPED/PLUGGED OUTLET TO THE SPRINKLER LOCATION INDICATED ON PLAN.

(3) FURNISH AND INSTALL SPRINKLER TO MAINTAIN SPRINKLER COVERAGE IN THE SPACE.

(4) CUT AND CONNECT A 1" SPRINKLER BRANCH PIPE TO THE EXISTING 2 1/2" SPRINKLER DISTRIBUTION MAIN SERVING THE CELLAR. EXTEND 1" PIPING TO THE SPRINKLER LOCATION INDICATED ON PLAN.

SPONSOR AGENCY
NYC DEPARTMENT OF CITYWIDE ADMINISTRATIVE SERVICES
53-37 72nd STREET
MASPETH, NY 11378
TEL (212) 669-1357

SPONSOR INSTITUTION
MASPETH TOWN HALL
53-37 72nd STREET
MASPETH, NY 11378
TEL (718) 335-6049

ARCHITECT
ANTHONY JOHNSON ARCHITECT LLC
80 EIGHTH AVENUE
New York, NY 10011
TEL (646) 930-2135

MEP
COLLECTIF ENGINEERING PLLC
27 WEST 20TH STREET
New York, NY 10011
TEL (646) 610-0343

STRUCTURAL ENGINEER
INNOVATIVE STRUCTURAL AND SPECIALTY ENGINEERING PLLC
140 BROADWAY
New York, NY 10005
TEL (646) 974-1389

REVISIONS:

NUMBER	DESCRIPTION	DATE
1	DD SET	9/22/25
2	75% CD	11/17/25
3	100% CD	01/12/26

Department of Design and Construction

DIVISION OF PUBLIC BUILDINGS

CAPITAL PROJECT NUMBER:
PWQMAHVAC

PROJECT
MASPETH TOWN HALL HVAC UPGRADE

53-37 72 STREET
QUEENS, NY 11378

FOR THE:
DCAS

DOB NOW #Q01356625-I1

DRAWING TITLE:
SPRINKLER CELLAR PLAN

DOB APPROVAL STAMP
NYC Buildings
ACCEPTED
Date: 06/09/2026

SEAL & SIGNATURE
STATE OF NEW YORK
JOSHUA DOUGLAS FINK
099745
LICENSED PROFESSIONAL ENGINEER

DATE:	9/22/25
PROJECT NO:	2430
DRAWN BY:	FP
CHECKED BY:	FP
DRAWING NUMBER:	SP-101.00
CADO FILE No:	2 OF 6

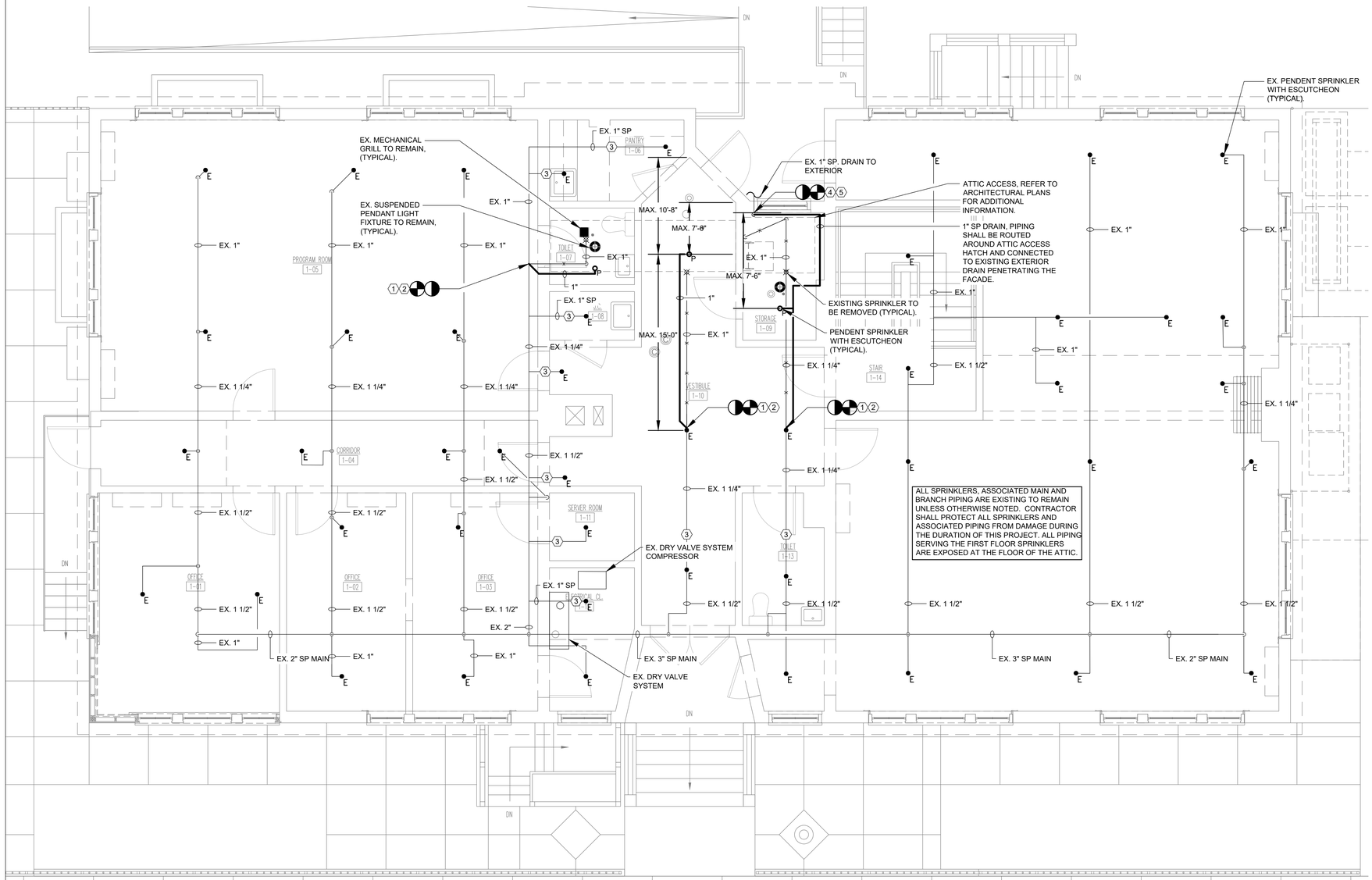

ALL SPRINKLERS, ASSOCIATED MAIN AND BRANCH PIPING ARE EXISTING TO REMAIN UNLESS OTHERWISE NOTED. CONTRACTOR SHALL PROTECT ALL SPRINKLERS AND ASSOCIATED PIPING FROM DAMAGE DURING THE DURATION OF THIS PROJECT. ALL PIPING SERVING THE FIRST FLOOR SPRINKLERS ARE EXPOSED AT THE FLOOR OF THE ATTIC.

1 SPRINKLER 1ST FLOOR PLAN
Scale: 1/4"=1' 0"

GENERAL NOTES

1. FOR SYMBOLS, LEGEND, AND NOTES REFER TO DRAWING SP-001.00
2. FOR SPECIFICATIONS REFER TO BOOK SPECIFICATIONS.
3. FOR DETAILS REFER TO DRAWINGS SP-501.00.
4. FOR SPRINKLER FLOOR PLANS REFER TO DRAWINGS SP-101.00 & SP-102.00.
4. FOR SPRINKLER RISER DIAGRAM REFER TO DRAWING SP-601.00.
5. ALL SPRINKLER WORK SHALL BE INSTALLED IN ACCORDANCE WITH 2022 NYC BUILDING CODE, NFPA-13-2016 AS MODIFIED BY APPENDIX Q OF THE NYC BUILDING CODE AND ALL OTHER AUTHORITIES HAVING JURISDICTION.
6. ALL SPRINKLER WORK SHALL BE COORDINATED WITH ALL NEW AND EXISTING WORK OF OTHER TRADES.
7. CONTRACTOR TO PROVIDE FIRE WATCH WHENEVER THE SPRINKLER SYSTEM IS TAKEN OFFLINE/OUT OF SERVICE. THE SYSTEM SHALL BE BROUGHT BACK ONLINE/IN SERVICE AT THE END OF EACH WORK DAY.
8. CONTRACTOR SHALL COORDINATE THE REMOVAL AND INSTALLATION OF SPRINKLERS AND ASSOCIATED PIPING WITH PHASING OF ALL OTHER WORK TO BE PERFORMED UNDER THIS PROJECT.
9. ALL NEW SPRINKLERS SHALL MATCH MAKE AND MODEL OF THE EXISTING TO REMAIN SPRINKLERS.
10. ALL INTERIOR/EXTERIOR FINISHES AFFECTED BY THE PROPOSED SPRINKLER WORK SHALL BE RESTORED TO MATCH EXISTING.

KEY NOTES

(1) DISCONNECT AND REMOVE EXISTING SPRINKLER AND ASSOCIATED PIPING BACK TO ACTIVE BRANCH. TEMPORARILY CAP/PLUG ALL RESULTING ACTIVE OUTLETS FOR CONNECTION OF PIPING AND SPRINKLERS. ISOLATED SPRINKLER REMOVAL AND INSTALLATION WORK SHALL OCCUR IN THE SAME DAY TO PROTECT THE INTEGRITY OF THE SYSTEM AND ALLOW FOR RE-ENERGIZING OF THE WHOLE SYSTEM AT THE END OF EACH WORK DAY.

(2) CONNECT AND EXTEND A 1" PIPE FROM THE TEMPORARILY CAPPED/PLUGGED OUTLET TO THE SPRINKLER LOCATION INDICATED ON PLAN.

(3) ALL BRANCH PIPING SHALL BE PROVIDED WITH SUPPORTS TO ALLOW FOR THE INSTALLATION OF A FLOOR AND REPLACEMENT OF MECHANICAL EQUIPMENT. CONTRACTOR SHALL REFER TO SUPPORT DETAILS ON DWG. SP-501.00 FOR METHODS IN WHICH PIPING CAN BE SUPPORTED FROM THE EXISTING STRUCTURE.

(4) DISCONNECT AND REMOVE SPRINKLER DRAIN DOWN PIPING FROM EXISTING HATCH OPENING. CONTRACTOR SHALL LEAVE THE 1" PENETRATION THROUGH THE FACADE FOR RECONNECTION OF RELOCATED PIPE FROM THE ATTIC.

(5) SPRINKLER PIPING SHALL EXTEND PASS THE ATTIC HATCH AND CONNECT TO THE EXISTING LOW POINT DRAIN THAT SPILLS TO THE EXTERIOR DISCONNECTED FROM THE EXISTING SYSTEM. PROVIDE DRAIN VALVE ON THE VERTICAL DRAIN PIPE IN FIRST FLOOR UPSTREAM OF THE FACADE PENETRATION. VALVE SHALL BE A MAXIMUM 7'-0" ABOVE THE FINISHED FLOOR. COORDINATE ROUTING OF DRAIN PIPING WITH FINAL HATCH LOCATION AND ACCESS.

SPONSOR AGENCY
NYC DEPARTMENT OF CITYWIDE ADMINISTRATIVE SERVICES
53-37 72nd STREET
MASPETH, NY 11378
TEL (212) 669-1357

SPONSOR INSTITUTION
MASPETH TOWN HALL
53-37 72nd STREET
MASPETH, NY 11378
TEL (718) 335-6049

ARCHITECT
ANTHONY JOHNSON ARCHITECT LLC
80 EIGHTH AVENUE
New York, NY 10011
TEL (646) 930-2135

MEP
COLLECTIF ENGINEERING PLLC
27 WEST 20TH STREET
New York, NY 10011
TEL (646) 610-0343

STRUCTURAL ENGINEER
INNOVATIVE STRUCTURAL AND SPECIALTY ENGINEERING PLLC
140 BROADWAY
New York, NY 10005
TEL (646) 974-1389

REVISIONS:

NUMBER	DESCRIPTION	DATE
1	DD SET	9/22/25
2	75% CD	11/17/25
3	100% CD	01/12/26

Department of Design and Construction

DIVISION OF PUBLIC BUILDINGS

CAPITAL PROJECT NUMBER:
PWQMAHVAC

PROJECT
MASPETH TOWN HALL HVAC UPGRADE

53-37 72 STREET
QUEENS, NY 11378

FOR THE:
DCAS

DOB NOW #Q01356625-I1

DRAWING TITLE:
SPRINKLER 1ST FLOOR PLAN

DOB APPROVAL STAMP
NYC Buildings
ACCEPTED
Date: 06/09/2026

SEAL & SIGNATURE
STATE OF NEW YORK
BENJAMIN DOUGLAS BRAUN
C99745
LICENSED PROFESSIONAL ENGINEER

DATE:	9/22/25
PROJECT NO:	2430
DRAWN BY:	FP
CHECKED BY:	FP
DRAWING NUMBER:	SP-102.00
CADO FILE No:	

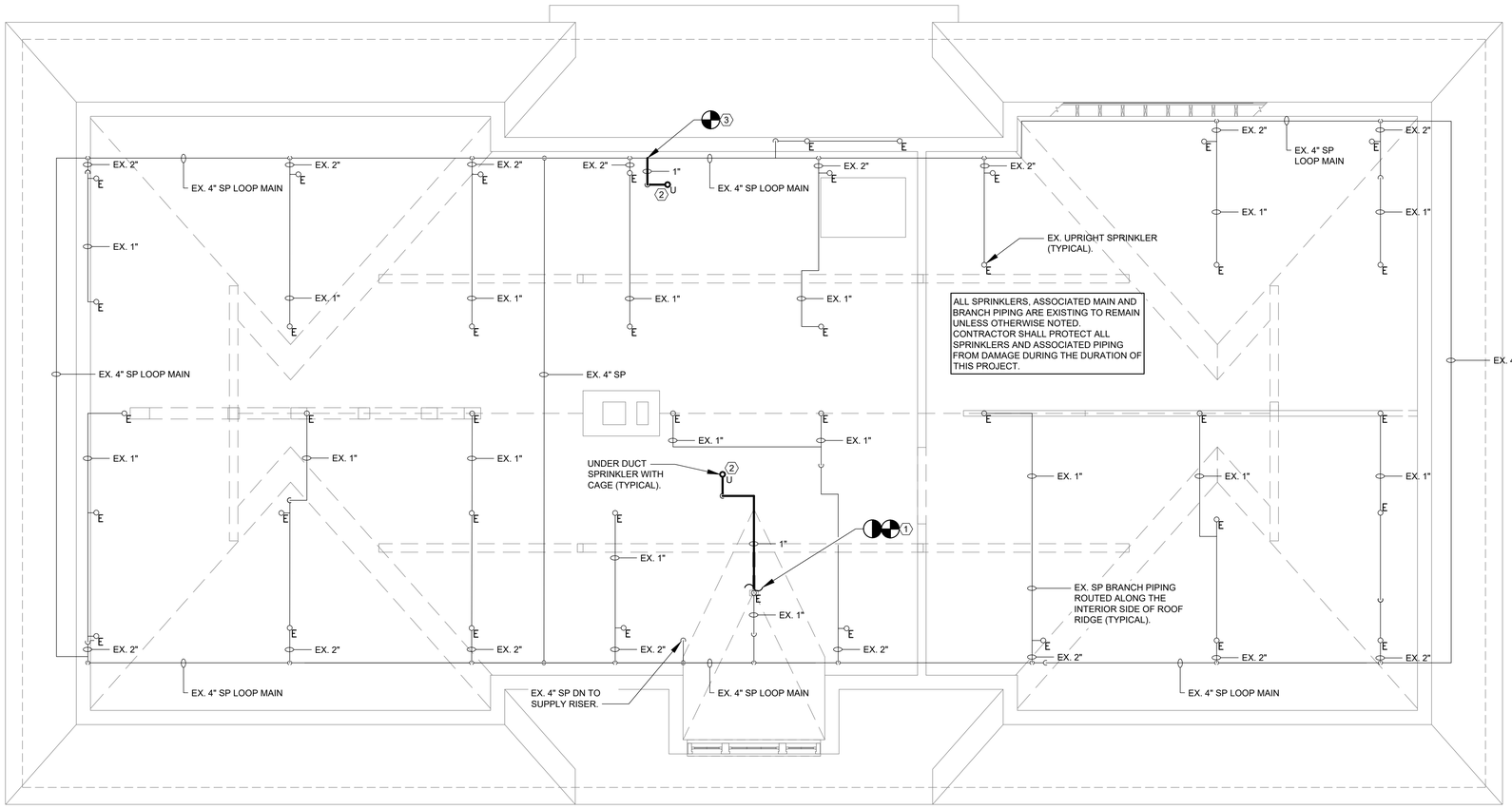

1 SPRINKLER ATTIC PLAN
Scale: 1/4"=1' 0"

GENERAL NOTES

1. FOR SYMBOLS, LEGEND, AND NOTES REFER TO DRAWING SP-001.00
2. FOR SPECIFICATIONS REFER TO BOOK SPECIFICATIONS.
3. FOR DETAILS REFER TO DRAWINGS SP-501.00.
4. FOR SPRINKLER FLOOR PLANS REFER TO DRAWINGS SP-101.00 & SP-102.00.
4. FOR SPRINKLER RISER DIAGRAM REFER TO DRAWING SP-601.00.
5. ALL SPRINKLER WORK SHALL BE INSTALLED IN ACCORDANCE WITH 2022 NYC BUILDING CODE, NFPA-13-2016 AS MODIFIED BY APPENDIX Q OF THE NYC BUILDING CODE AND ALL OTHER AUTHORITIES HAVING JURISDICTION.
6. ALL SPRINKLER WORK SHALL BE COORDINATED WITH ALL NEW AND EXISTING WORK OF OTHER TRADES.
7. CONTRACTOR TO PROVIDE FIRE WATCH WHENEVER THE SPRINKLER SYSTEM IS TAKEN OFFLINE/OUT OF SERVICE. THE SYSTEM SHALL BE BROUGHT BACK ONLINE/IN SERVICE AT THE END OF EACH WORK DAY.
8. CONTRACTOR SHALL COORDINATE THE REMOVAL AND INSTALLATION OF SPRINKLERS AND ASSOCIATED PIPING WITH PHASING OF ALL OTHER WORK TO BE PERFORMED UNDER THIS PROJECT.
9. ALL NEW SPRINKLERS SHALL MATCH MAKE AND MODEL OF THE EXISTING TO REMAIN SPRINKLERS.
10. ALL INTERIOR/EXTERIOR FINISHES AFFECTED BY THE PROPOSED SPRINKLER WORK SHALL BE RESTORED TO MATCH EXISTING.

KEY NOTES

(1) DISCONNECT AND REMOVE EXISTING SPRINKLER AND ELBOW FITTING. CONTRACTOR TO INSTALL TEE AND EXTEND PIPING AS INDICATED TO PROVIDE UNDER DUCT SPRINKLER. CONTRACTOR TO INSTALL SPRINKLER IN BULL OF TEE TO MAINTAIN SPRINKLER COVERAGE IN THE SPACE. ISOLATED SPRINKLER REMOVAL AND INSTALLATION WORK SHALL OCCUR IN THE SAME DAY TO PROTECT THE INTEGRITY OF THE SYSTEM AND ALLOW FOR RE-ENERGIZING OF THE WHOLE SYSTEM AT THE END OF EACH WORK DAY.

(2) COORDINATE LOCATION OF UNDER DUCT SPRINKLER WITH FINAL LOCATION OF MECHANICAL EQUIPMENT.

(3) CUT AND CONNECT A 1" SPRINKLER BRANCH PIPE TO THE EXISTING 4" SPRINKLER DISTRIBUTION MAIN SERVING THE ATTIC. EXTEND 1" PIPING TO THE SPRINKLER LOCATION INDICATED ON PLAN.

SPONSOR AGENCY
NYC DEPARTMENT OF CITYWIDE ADMINISTRATIVE SERVICES
53-37 72nd STREET
MASPETH, NY 11378
TEL (212) 669-1357

SPONSOR INSTITUTION
MASPETH TOWN HALL
53-37 72nd STREET
MASPETH, NY 11378
TEL (718) 335-6049

ARCHITECT
ANTHONY JOHNSON ARCHITECT LLC
80 EIGHTH AVENUE
New York, NY 10011
TEL (646) 930-2135

MEP
COLLECTIF ENGINEERING PLLC
27 WEST 20TH STREET
New York, NY 10011
TEL (646) 610-0343

STRUCTURAL ENGINEER
INNOVATIVE STRUCTURAL AND SPECIALTY ENGINEERING PLLC
140 BROADWAY
New York, NY 10005
TEL (646) 974-1389

REVISIONS:

NUMBER	DESCRIPTION	DATE
1	DD SET	9/22/25
2	75% CD	11/17/25
3	100% CD	01/12/26

Department of Design and Construction

DIVISION OF PUBLIC BUILDINGS

CAPITAL PROJECT NUMBER:
PWQMAHVAC

PROJECT
MASPETH TOWN HALL HVAC UPGRADE

53-37 72 STREET
QUEENS, NY 11378

FOR THE:
DCAS

DOB NOW #Q01356625-I1

DRAWING TITLE:
SPRINKLER ATTIC PLAN

DOB APPROVAL STAMP
NYC Buildings
ACCEPTED
Date: 06/09/2026

SEAL & SIGNATURE
JONATHAN DOUGLAS SMITH
STATE OF NEW YORK
C99745
LICENSED PROFESSIONAL ENGINEER

DATE:	9/22/25
PROJECT NO:	2430
DRAWN BY:	FP
CHECKED BY:	FP
DRAWING NUMBER:	SP-103.00
CADO FILE No:	4 OF 6

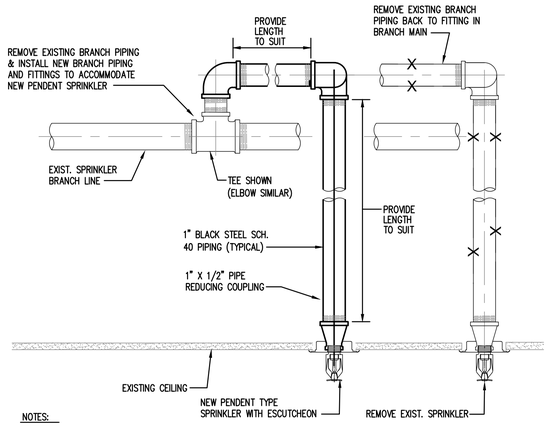

NOTES:

1. ADJUST SPRINKLER DROPS AS NECESSARY TO CLEAR OBSTRUCTIONS SUCH AS THE CEILING "T" BAR SUSPENSION SYSTEM, LIGHT FIXTURES, ETC. PROVIDE A PIPE HANGER IF THE HORIZONTAL OFFSET LENGTH EXCEEDS 24 INCHES.

TYPICAL PENDENT SPRINKLER - FINISH CEILING

NOT TO SCALE

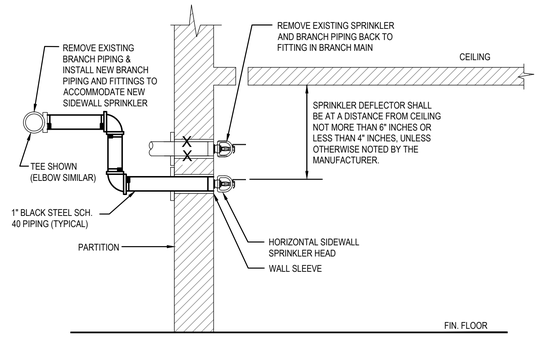

NOTES:

1. CONTRACTOR TO COORDINATE FINAL PIPE CONNECTION TYPE TO EXISTING SYSTEM TO ACCOMMODATE SPRINKLER LOCATION. EXISTING SPRINKLERS, PIPING AND FITTINGS SHALL NOT BE REUSED/REINSTALLED IN THE SYSTEM ONCE DISCONNECTED.

TYPICAL SIDEWALL SPRINKLER - FINISH SPACE

NOT TO SCALE

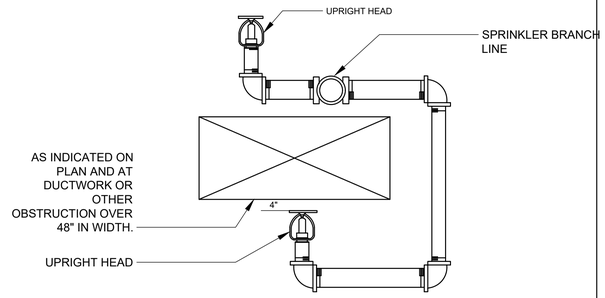

NOTES:

1. SPRINKLER CONTRACTOR SHALL INSTALL SPRINKLERS ABOVE AND BELOW DUCT OR OTHER OBSTRUCTION OVER 48" IN WIDTH AS INDICATED ON PLAN.
2. SPRINKLER CONTRACTOR SHALL COORDINATE WITH THE HVAC AND GENERAL CONTRACTOR.

TYPICAL UNDER DUCT SPRINKLER

NOT TO SCALE

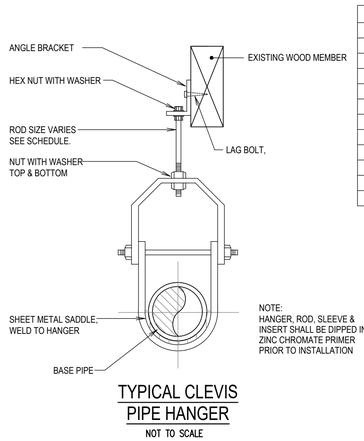

ROD SCHEDULE	
PIPE SIZE	ROD SIZE
1/2"	3/8"
3/4"	3/8"
1"	3/8"
1-1/4"	3/8"
1-1/2"	3/8"
2"	3/8"
2-1/2"	3/8"
3"	3/8"
4"	1/2"
5"	1/2"
6"	1/2"

TYPICAL CLEVIS PIPE HANGER

NOT TO SCALE

WOOD FRAME MOUNTED DETAIL

NOT TO SCALE

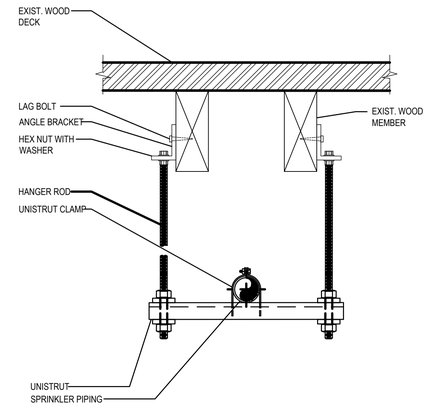

UNISTRUT SUPPORT DETAIL

NOT TO SCALE

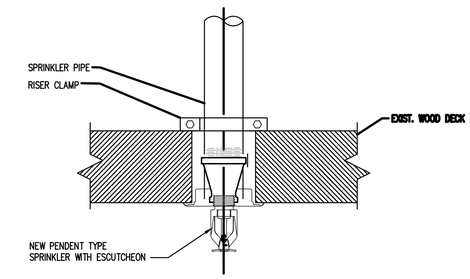

NOTES:

1. COORDINATE SPRINKLER INSTALLATION WITH ARCHITECTURAL FINISHES, (I.E. FINISH CEILING HEIGHT AND SYSTEM).

RISER CLAMP SUPPORT DETAIL

NOT TO SCALE

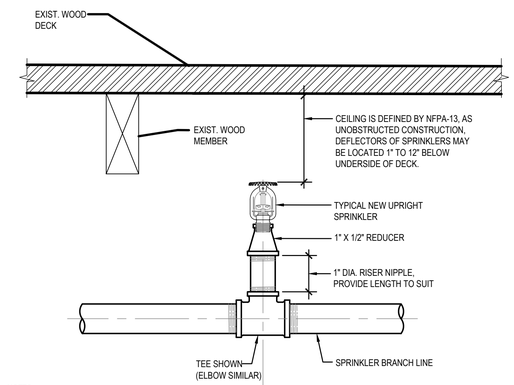

NOTES:

1. SPRINKLERS SHALL BE INSTALLED IN ACCORDANCE WITH TABLE 8.6.5.1.2 "POSITIONING OF SPRINKLERS TO AVOID OBSTRUCTIONS TO DISCHARGE [STANDARD SPRAY UPRIGHT/STANDARD SPRAY PENDENT (SSU/SSP)]" AS INDICATED IN NFPA-13-2016 AS MODIFIED BY APPENDIX Q OF THE 2022 NYC BUILDING CODE.

TYPICAL UPRIGHT SPRINKLER

NOT TO SCALE

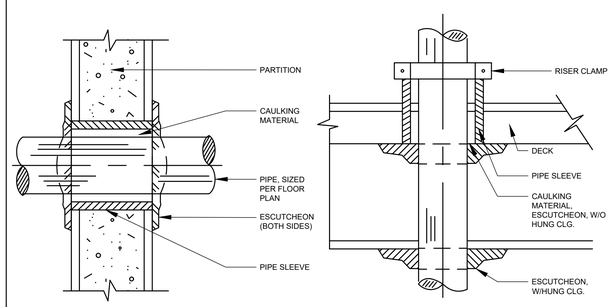

THRU INTERIOR PARTITION

THRU FLOORS

PIPING PENETRATION DETAILS

NOT TO SCALE

DOB APPROVAL STAMP

NYC Buildings

ACCEPTED

Date: 06/09/2026

SPONSOR AGENCY

NYC DEPARTMENT OF CITYWIDE ADMINISTRATIVE SERVICES
53-37 72nd STREET
MASPETH, NY 11378
TEL (212) 669-1357

SPONSOR INSTITUTION

MASPETH TOWN HALL
53-37 72nd STREET
MASPETH, NY 11378
TEL (718) 335-6049

ARCHITECT

ANTHONY JOHNSON ARCHITECT LLC
80 EIGHTH AVENUE
New York, NY 10011
TEL (646) 930-2135

MEP

COLLECTIF ENGINEERING PLLC
27 WEST 20TH STREET
New York, NY 10011
TEL (646) 610-0343

STRUCTURAL ENGINEER

INNOVATIVE STRUCTURAL AND SPECIALTY ENGINEERING PLLC
140 BROADWAY
New York, NY 10005
TEL (646) 974-1389

REVISIONS:

NUMBER	DESCRIPTION	DATE
1	DD SET	9/22/25
2	75% CD	11/17/25
3	100% CD	01/12/26

Department of Design and Construction

DIVISION OF PUBLIC BUILDINGS

CAPITAL PROJECT NUMBER:
PWQMAHVAC

PROJECT

MASPETH TOWN HALL HVAC UPGRADE

53-37 72 STREET
QUEENS, NY 11378

FOR THE:
DCAS

DOB NOW #Q01356625-I1

DRAWING TITLE:

SPRINKLER DETAILS

SEAL & SIGNATURE

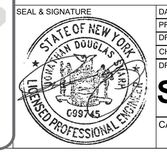

DATE:	9/22/25
PROJECT NO:	2430
DRAWN BY:	FP
CHECKED BY:	FP
DRAWING NUMBER:	SP-501.00
CADO FILE No:	5 OF 6

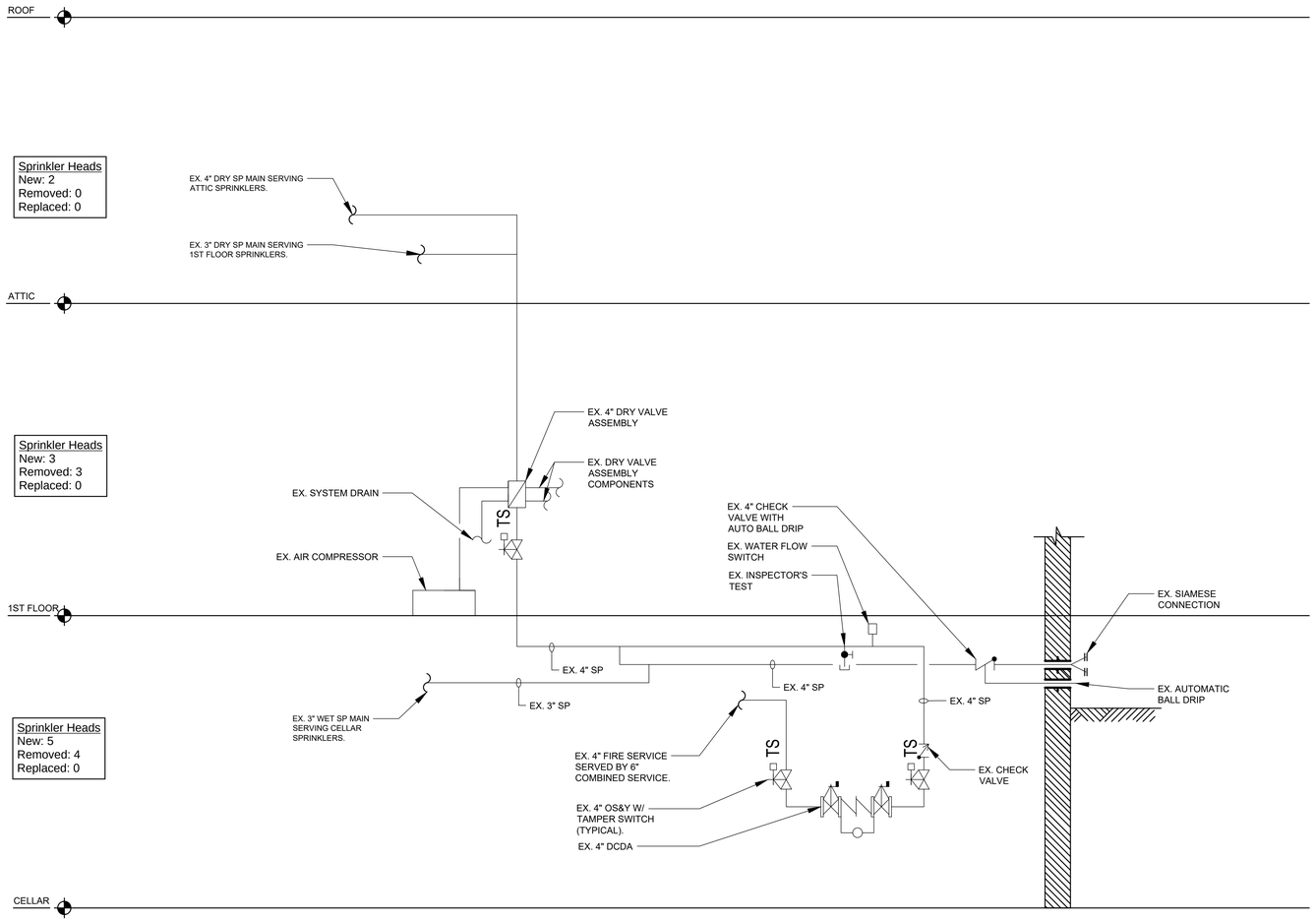

1 SPRINKLER RISER DIAGRAM
NTS

SPONSOR AGENCY

NYC DEPARTMENT OF CITYWIDE ADMINISTRATIVE SERVICES
53-37 72nd STREET
MASPETH, NY 11378
TEL (212) 669-1357

SPONSOR INSTITUTION

MASPETH TOWN HALL
53-37 72nd STREET
MASPETH, NY 11378
TEL (718) 335-6049

ARCHITECT

ANTHONY JOHNSON ARCHITECT LLC
80 EIGHTH AVENUE
New York, NY 10011
TEL (646) 930-2135

MEP

COLLECTIF ENGINEERING PLLC
27 WEST 20TH STREET
New York, NY 10011
TEL (646) 610-0343

STRUCTURAL ENGINEER

INNOVATIVE STRUCTURAL AND SPECIALTY ENGINEERING PLLC
140 BROADWAY
New York, NY 10005
TEL (646) 974-1389

REVISIONS:

NUMBER	DESCRIPTION	DATE
1	DD SET	9/22/25
2	75% CD	11/17/25
3	100% CD	01/12/26

Department of Design and Construction

DIVISION OF PUBLIC BUILDINGS

CAPITAL PROJECT NUMBER:
PWQMAHVAC

PROJECT

MASPETH TOWN HALL HVAC UPGRADE

53-37 72 STREET
QUEENS, NY 11378

FOR THE:
DCAS

DOB NOW #Q01356625-I1

DRAWING TITLE:

SPRINKLER RISER DIAGRAM

DOB APPROVAL STAMP

NYC Buildings
ACCEPTED
Date: 06/09/2026

SEAL & SIGNATURE

JONATHAN DOUGLAS SMITH
STATE OF NEW YORK
C99745
LICENSED PROFESSIONAL ENGINEER

DATE:	9/22/25
PROJECT NO:	2430
DRAWN BY:	FP
CHECKED BY:	FP

DRAWING NUMBER:

SP-601.00

CADO FILE No: | 6 OF 6