NEW YORK CITY
ENVIRONMENTAL PROTECTION
BUREAU OF ENGINEERING DESIGN AND CONSTRUCTION

CAPITAL PROJECT WP-282
CONTRACT OB-144A

TRC OPTIMIZATION AT THE OAKWOOD BEACH WRRF

STATEN ISLAND, NY

DATE: OCTOBER 2026

BID SET

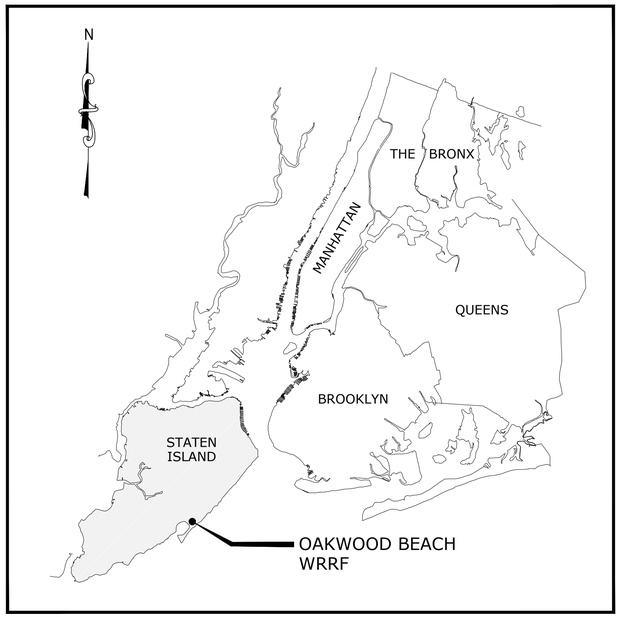

KEY PLAN



LOCATION PLAN

Kenneth Moriarty
Digitally signed by Kenneth Moriarty
Date: 2026.09.29 14:22:36 -04'00'

KENNETH E. MORIARTY, P.E.
ASSISTANT COMMISSIONER
BUREAU OF ENGINEERING DESIGN AND CONSTRUCTION

Ana Barrio
Digitally signed by Ana Barrio
Date: 2026.09.29 17:03:51 -04'00'

ANA BARRIO
DEPUTY COMMISSIONER
BUREAU OF ENGINEERING DESIGN AND CONSTRUCTION

STATE OF NEW YORK · FRANK VISINGARDI · LICENSED PROFESSIONAL ENGINEER · 072716

Last Saved By & Date: ZALBER, Wednesday, September 09, 2026 and Date Plotted: Friday, September 25, 2026 Time: 9:31:07 AM
Paper Size: User2314 Plot Scale: 1:1 Plot Style Table: DEP-BEDC 22x34 Drawings.ctb
Drawing Name: & Location: C:\pwworking\east01\d41190775\G-001.dwg

DRAWING LIST - CAPITAL PROJECT WP-282
TRC OPTIMIZATION AT THE OAKWOOD BEACH WRRF - CONTRACT OB-144A
BID SET

SHEET NO.	DRAWING NO.	SHEET TITLE
GENERAL		
1	G-001.00	COVER SHEET
2	G-002.00	LIST OF DRAWINGS
3	G-003.00	SYMBOLS, ABBREVIATIONS AND GENERAL NOTES
4	G-004.00	COLORIMETRIC TRC ANALYZER PROCESS FLOW DIAGRAM
5	G-005.00	ASSET LIST
CIVIL		
6	GC-001.00	SYMBOLS, ABBREVIATIONS AND GENERAL NOTES
7	C-001.00	EXISTING SITE PLAN
8	C-002.00	SOIL EROSION AND SEDIMENT CONTROL PLAN
9	C-003.00	SOIL EROSION AND SEDIMENT CONTROL DETAILS
10	C-004.00	SITE PLAN AND YARD PIPING MODIFICATIONS
11	C-005.00	SITE DETAILS SHEET 1 OF 3
12	C-006.00	SITE DETAILS SHEET 2 OF 3
13	C-007.00	SITE DETAILS SHEET 3 OF 3
STRUCTURAL		
14	GS-001.00	GENERAL NOTES
15	GS-002.00	ABBREVIATIONS
16	DS-001.00	LANDSIDE CHLORINE CONTACT TANK 430200 TEE RAIL DEMOLITION PLAN AND DETAIL
17	DS-002.00	LANDSIDE CHLORINE CONTACT TANK 430200 DEMOLITION PLAN AND SECTIONS
18	DS-003.00	LANDSIDE CHLORINE CONTACT TANK 430200 PARSHALL FLUME DEMOLITION PLAN AND SECTION
19	S-001.00	LANDSIDE CHLORINE CONTACT TANK 027.AD01.02 CROSS COLLECTOR PIT AND WALL OPENINGS PLAN, SECTIONS AND DETAIL
20	S-002.00	LANDSIDE CHLORINE CONTACT TANK 027.AD01.02 EFFLUENT TROUGH AND SCUM CHANNEL INFILL PLAN AND SECTION
21	S-003.00	CHLORINE CONTACT TANKS SECTIONS AND DETAIL
22	S-004.00	CHLORINE CONTACT TANKS SECTION AND DETAILS
23	S-005.00	CHLORINE CONTACT TANKS RAILINGS AND TOEBOARD DETAILS
24	S-006.00	CONCRETE REPAIR DETAILS
25	S-007.00	MIXER SUPPORT PLANS AND SECTIONS
26	S-008.00	TYPICAL CONCRETE DETAILS
MECHANICAL		
27	GM-001.00	ABBREVIATIONS AND GENERAL NOTES
28	DM-001.00	METER BUILDING DEMOLITION PLAN, SECTION AND DETAIL
29	DM-002.00	CHLORINE CONTACT TANKS DEMOLITION PLAN AND SECTION
30	DM-003.00	CHLORINE CONTACT TANKS DEMOLITION SECTIONS
31	M-001.00	METER BUILDING PLAN, SECTION AND DETAIL
32	M-002.00	CHLORINE CONTACT TANKS PLAN AT EL 1.84 AND SECTION
33	M-003.00	CHLORINE CONTACT TANKS PLAN AT EL 15.84
34	M-004.00	CHLORINE CONTACT TANKS SECTIONS AND DETAIL
35	M-005.00	CHLORINE CONTACT TANKS COLORIMETRIC TRC ANALYZER SAMPLE PUMPS ENCLOSURE AND PIPING PLAN

SHEET NO.	DRAWING NO.	SHEET TITLE
ELECTRICAL		
36	GE-001.00	SYMBOLS
37	GE-002.00	ABBREVIATIONS AND GENERAL NOTES
38	DE-001.00	METER BUILDING DEMOLITION PLAN AT EL 1.84
39	DE-002.00	CHLORINE CONTACT TANKS DEMOLITION PLAN AT EL 15.84
40	DE-003.00	MICROSTRAINER BUILDING DEMOLITION PLAN
41	E-001.00	SITE PLAN
42	E-002.00	AREA CLASSIFICATION PLAN
43	E-003.00	CONTROL WIRING DIAGRAMS
44	E-004.00	MCC NO 11 SINGLE LINE DIAGRAM AND ELEVATION MODIFICATIONS
45	E-005.00	MCC NO 12 SINGLE LINE DIAGRAM AND ELEVATION MODIFICATIONS
46	E-006.00	METER BUILDING POWER PLAN AT EL 1.84
47	E-007.00	METER BUILDING AND CHLORINE CONTACT TANKS POWER PLAN AT EL 15.84
48	E-008.00	MICROSTRAINER BUILDING POWER PLAN
49	E-009.00	CHLORINE BUILDING POWER PLAN
50	E-010.00	MAIN BUILDING BASEMENT AND CONTROL ROOM POWER PLAN
51	E-011.00	PANELBOARD SCHEDULES
52	E-012.00	CONDUIT AND WIRE SCHEDULE
53	E-013.00	CONTROL BLOCK DIAGRAM
54	E-014.00	DUCTBANK SECTIONS AND SCHEDULE
55	E-015.00	STANDARD DETAILS SHEET 1 OF 2
56	E-016.00	STANDARD DETAILS SHEET 2 OF 2

SHEET NO.	DRAWING NO.	SHEET TITLE
INSTRUMENTATION		
57	GI-001.00	SYMBOLS, ABBREVIATIONS AND GENERAL NOTES
58	GI-002.00	CONTROL SYSTEM ARCHITECTURE
59	I-001.00	CHLORINE CONTACT TANKS
60	I-002.00	EXISTING SODIUM HYPOCHLORITE BULK STORAGE TANKS AND METERING PUMPS
61	I-003.00	MISCELLANEOUS SYSTEMS
62	I-004.00	STANDARD DETAILS
63	I-005.00	LCP-4200 ELEVATION
64	I-006.00	PLC-4200 POWER DISTRIBUTION SHEET 1 OF 2
65	I-007.00	PLC-4200 POWER DISTRIBUTION SHEET 2 OF 2
66	I-008.00	PLC-4200 DIGITAL INPUT MODULE SHEET 1 OF 3
67	I-009.00	PLC-4200 DIGITAL INPUT MODULE SHEET 2 OF 3
68	I-010.00	PLC-4200 DIGITAL INPUT MODULE SHEET 3 OF 3
69	I-011.00	PLC-4200 DIGITAL OUTPUT MODULE
70	I-012.00	PLC-4200 ANALOG INPUT MODULE SHEET 1 OF 3
71	I-013.00	PLC-4200 ANALOG INPUT MODULE SHEET 2 OF 3
72	I-014.00	PLC-4200 ANALOG INPUT MODULE SHEET 3 OF 3
73	I-015.00	PLC-4200 ANALOG OUTPUT MODULE SHEET 1 OF 2
74	I-016.00	PLC-4200 ANALOG OUTPUT MODULE SHEET 2 OF 2

BID SET

SUBMITTAL DATE: 10/2026

GRAPHIC SCALES CHECK BEFORE USE

IF SHEET IS LESS THAN 22" X 34" IT IS A REDUCED PRINT. SCALE ACCORDINGLY

NO.	DATE	REVISIONS/DESCRIPTION	APPR'D.

DESIGNED BY: RH
DRAWN BY: JG
CHECKED BY: RH
DESIGN LEAD: VICTOR FRAZITA, P.E.
PROJECT MANAGER: FRANK VISINGARDI, JR., P.E.

STATE OF NEW YORK · FRANK VISINGARDI JR. · 073716 · LICENSED PROFESSIONAL ENGINEER

Environmental Protection

ACCOUNTABLE MANAGER: STELLA UWAECHIE
PORTFOLIO MANAGER: ANDREW NG, P.E.
EXECUTIVE DIRECTOR: KENNETH E. MORIARTY, P.E.

"WARNING-IT IS A VIOLATION, OF THE NEW YORK STATE EDUCATION LAW, SECTION, 7209.2, FOR ANY PERSON, UNLESS (S)HE IS ACTING UNDER THE DIRECTION OF A LICENSED PROFESSIONAL ENGINEER, TO ALTER THIS DOCUMENT IN ANY WAY. IF ALTERED, THE ALTERING PERSON SHALL COMPLY WITH THE REQUIREMENTS OF NEW YORK EDUCATION, LAW, SECTION, 7209.2."

NEW YORK CITY ENVIRONMENTAL PROTECTION
BUREAU OF ENGINEERING DESIGN & CONSTRUCTION
96-05 HORACE HARDING EXPRESSWAY 5th FLOOR
CORONA, NEW YORK 11368
www.nyc.gov/dep

CAPITAL PROJECT WP-282
STATEN ISLAND, NY, OAKWOOD BEACH WRRF
CONTRACT OB-144A
LIST OF DRAWINGS

DATE: OCTOBER 2026
SHEET NO: 2 OF 74
DRAWING NO. G–002.00

Last Saved By: ZALBER Last Date Saved: 9/30/2026 10:24 AM Date & Time Plotted: 9/30/2026 10:25 AM
Paper Size Printed/Plotted: ANSI full bleed D (34.00 x 22.00 Inches) Plot Scale:1:1 Plot Style Table: DEP_BEDC_22x34_ByWeight.ctb
Drawing File Name & Drive Location: C:\pwworking\east01\d4119075\G-002.dwg
All inquiries regarding this drawing(s) or project should be made to NYC Environmental Protection, Bureau of Engineering Design and Construction.

GENERAL SYMBOLOGY

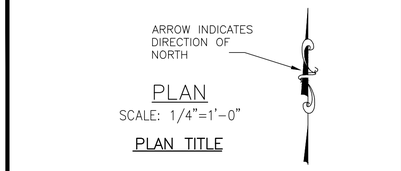

FOR REFERENCING DETAILS INCLUDED IN DRAWING SET.

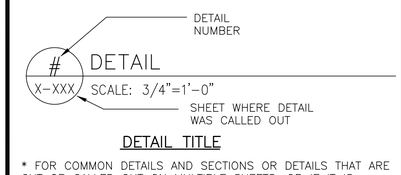

* FOR COMMON DETAILS AND SECTIONS OR DETAILS THAT ARE CUT OR CALLED OUT ON MULTIPLE SHEETS, OR IF IT IS SHOWN ON THE SAME SHEET IT IS INDICATED THE SHEET NUMBER IS REPLACED BY A DASH (–).

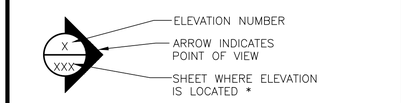

PIPING SYMBOLOGY

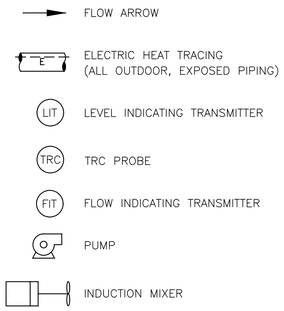

ABBREVIATIONS

⌀ DIA.	DIAMETER
±	PLUS/MINUS
A.B.	ANCHOR BOLT
ADD'L	ADDITIONAL
AFF	ABOVE FINISHED FLOOR
ARCH	ARCHITECTURAL
@	AT
&	AND
BAL.	BALANCE
B,BOT	BOTTOM
BC.	BOTTOM OF CURB
BLK	BLOCK
BM	BEAM
B.O.S.	BOTTOM OF STEEL
BPV	BACK PRESSURE VALVE
BU	BUTTERFLY VALVE
BV	BALL VALVE
CB	CATCH BASIN
C.B.	CONCRETE BEAM
CCT	CHLORINE CONTACT TANK
C.I.	CAST IRON
CJ	CONSTRUCTION JOINT
CL.	CLEARANCE
C.L.F.	CHAIN LINK FENCE
℄	CENTERLINE
C.M., CMU	CONCRETE MASONRY UNIT
C.O.	CLEAN OUT
C.O.D.P.	CLEAN OUT WITH DECK PLATE
COL	COLUMN
CONC	CONCRETE
CONN	CONNECTION
CONT	CONTINUE, CONTINUOUS
CPLG	COUPLING
CV	CHECK VALVE
CTR	CENTER
CW	COLD WATER
D	DRAIN
DCV	DOUBLE CHECK VALVE
DET	DETAIL
D.I.	DUCTILE IRON
DIA./⌀	DIAMETER
DIM(S)	DIMENSION(S)
DWG(S)	DRAWING(S)
DWLS	DOWELS
"E"	EXISTING
EA	EACH
EF	EACH FACE
EC	ELECTRICAL CONTRACTOR
EL,ELEV	ELEVATION
EMH	ELECTRIC MANHOLE
EQ	EQUAL
EQUIP	EQUIPMENT
ES	EACH SIDE
ETC	ET CETERA
EW	EACH WAY
EW	EFFLUENT WATER
EXP	EXPANSION
EXT	EXTERIOR
FB	FLOOR BEAM
FD	FLOOR DRAIN
FDN	FOUNDATION
FIN	FINISH(ED)
FIN. FL.	FINISHED FLOOR
FLR	FLOOR
FM	FORCE MAIN
FOW	FACE OF WALL
FTG	FOOTING
GA	GAUGE
GLV	GLOBE VALVE
GM	GAS MAIN
GS	GALVANIZED STEEL
GV	GATE VALVE
GC	GENERAL CONTRACTOR
HB	HOSE BIBB
HGR	HANGER
HORIZ,H	HORIZONTAL
HR	HANDRAIL
HDPE	HIGH DENSITY POLYETHYLENE
HP	HIGH POINT
H.T.	HIGH TENSION
H&V	HEATING AND VENTILATING
HYD	HYDRANT
ID	INSIDE DIAMETER
INSUL.	INSULATION
INT	INTERIOR
INV. EL./I.E.	INVERT ELEVATION
JT	JOINT
K	KIPS
LBS	POUNDS
LF	LINEAR FEET
LG	LONG
L.H.	LEFT HAND
L.L.	LOW LEVEL
LLV	LONG LEG VERTICAL
LP	LOW POINT
MAX	MAXIMUM
MECH	MECHANICAL
MFG	MANUFACTURING
MFTR	MANUFACTURER
MIN	MINIMUM
MH	MANHOLE
NC	NORMALLY CLOSED
NO/#	NUMBER
NRS	NON-RISING STEM
NTS	NOT TO SCALE
OC	ON CENTER
OD	OUTSIDE DIAMETER
OF	OVERFLOW
OPNG	OPENING
OPP	OPPOSITE
PCE, PCS	PIECE (S)
PERM	PERMANENT
PI	PRESSURE INDICATOR
ℙ	PLATE, PROPERTY LINE
PLATF	PLATFORM
PRESS.	PRESSURE
PRV	PRESSURE RELIEF VALVE
PSF	POUNDS PER SQUARE FOOT
P.S.	PUMP STATION
PV	PLUG VALVE
PVC	POLYVINYL CHLORIDE PIPE
PVMT	PAVEMENT
RAD	RADIUS
RD	ROOF DRAIN
REF	REFERENCE
REINF	REINFORCE,REINFORCING
REQ'D	REQUIRED
R.H.	RIGHT HAND
RPZ	REDUCED PRESSURE ZONE BACKFLOW PREVENTER
S	SEWER
SAN	SANITARY DRAIN
SCH	SCHEDULE
SECT	SECTION
SIM	SIMILAR
SD	STORM DRAIN
SL	SLAB
SPECS	SPECIFICATIONS
SQ.	SQUARE
SQ. FT.	SQUARE FEET
SS	STAINLESS STEEL
STA.	STATION
STD	STANDARD
STP	SEWAGE TREAMENT PLANT
STIFF	STIFFENER
STRUCT	STRUCTURAL
SW	SIDEWALK
SYM	SYMMETRICAL
T	TOP
T&B	TOP AND BOTTOM
TC	TOP OF CURB
TEMP	TEMPORARY
TK	TANK
T.O.C.	TOP OF CONCRETE
TOS	TOP OF STEEL/SLAB
TOW	TOP OF WALL
TYP	TYPICAL
UGE	UNDERGROUND ELECTRIC
UN, UNO, UON	UNLESS NOTED OTHERWISE
VB	VACUUM BREAKER
VERT,V	VERTICAL
VTR	VENT THROUGH ROOF
W/	WITH
W.P.	WORKING POINT
WWF	WELDED WIRE FABRIC
WV	WATER VALVE
WS	WATER STOP
OCB	ODOR CONTROL BUILDING
PST	PRIMARY SETTING TANKS
SDB	SLUDGE DEGRITTER BUILDING

GENERAL NOTES

1. WORK PERFORMED UNDER THIS CONTRACT SHALL COMPLY WITH APPLICABLE FEDERAL, STATE, AND LOCAL SAFETY AND OCCUPATIONAL HEALTH LAWS AND REGULATIONS. WHERE THE REQUIREMENTS OF THE SPECIFICATION, APPLICABLE LAWS, CRITERIA, ORDINANCES, REGULATIONS, AND REFERENCED DOCUMENTS VARY, THE OWNER SHALL BE CONTACTED AND WILL PROVIDE AN INTERPRETATION FOR THE CONTRACTOR.
2. ALL PLANT STREETS, ROADWAYS, SECURITY AND ACCESS AREAS SHALL REMAIN UNOBSTRUCTED DURING CONSTRUCTION. THE NEED TO TEMPORARILY BLOCK OR CLOSE OFF THESE AREAS SHALL BE COORDINATED WITH THE ENGINEER, OWNER AND PLANT SECURITY. THE OWNERS PLANT SITE IS AN ACTIVE TRUCKING AREA. CONTRACTOR SHALL RECOGNIZE THIS AND COORDINATE ALL DELIVERIES, LARGE VEHICLES NEEDS ETC. TO THE BEST OF THEIR ABILITIES.
3. ALL AREAS OF THE PLANT IMPACTED BY TEMPORARY FACILITIES SHALL BE RESTORED TO ORIGINAL CONDITION BY THE CONTRACTOR.
4. THE CONTRACTOR SHALL BE RESPONSIBLE FOR THE PROTECTION OF THEIR WORK AND NEWLY INSTALLED WORK, AND PROVIDE APPROPRIATE BARRIERS AND SAFETY GUARD RAILS, AS REQUIRED.
5. THE CONTRACTOR SHALL FILE PLANS WITH GOVERNING LOCAL AND STATE AUTHORITIES HAVING JURISDICTION AND SHALL SECURE ALL PERMITS AND PAY ALL FEES REQUIRED FOR INSTALLATION OF THEIR WORK, UNLESS OTHERWISE SPECIFIED IN THE CONTRACT DOCUMENTS.
6. THE CONTRACTOR SHALL INDEMNIFY THE OWNER, THEIR REPRESENTATIVES AND THE ENGINEER FROM ANY CLAIMS OR SUITS RESULTING FROM NEGLIGENCE ON THE PART OF THE CONTRACTOR FOR FAILING TO EXECUTE THEIR WORK IN ACCORDANCE WITH THE CONTRACT DOCUMENTS.
7. THE CONTRACTOR SHALL PROVIDE ALL RIGGING, RAMPS, AND HOISTING, AS REQUIRED FOR THE INSTALLATION OF THIS WORK.
8. ALL WORK SHALL BE PERFORMED BY LICENSED CONTRACTORS AND WORKMAN EXPERIENCED IN THE TRADE HAVING JURISDICTION. ALL WORK SHALL BE SUPERVISED AT ALL TIMES.
9. ALL CONSTRUCTION WORK SHALL BE CONFINED TO THE AREA INDICATED ON THE DRAWINGS AND SHALL NOT BLOCK MEANS OF EGRESS FOR OCCUPANTS OF BUILDINGS.
10. WORK AREA SHALL BE LEFT BROOM CLEAN AT THE END OF EACH DAY. ALL DISCARDED AND DEMOLISHED MATERIAL AND RUBBISH SHALL BE REMOVED FROM PREMISES DAILY IN A LEGAL AND APPROVED MANNER.
11. ALL WORK SHOWN ON ALL DRAWINGS IS NEW UNLESS OTHERWISE NOTED.
12. THE CONTRACTOR SHALL COORDINATE WITH THE OWNER THE SUPPLY OF TEMPORARY POWER, POTABLE WATER, AND LIGHTING, AS REQUIRED TO PERFORM HIS WORK. SUCH UTILITY REQUIREMENTS ARE THE CONTRACTOR'S RESPONSIBILITY.
13. CONTRACTOR SHALL COORDINATE AND SCHEDULE THEIR ACTIVITIES WITH SITE ACTIVITIES, AS TO NOT INTERFERE WITH NORMAL SITE OPERATION, AND AS REQUIRED TO NOT IMPEDE THE PROGRESS OF RELATED PROJECT WORK.
14. FIELD OFFICES, TRAILERS, AND STAGING AREA TO BE DESIGNATED PRIOR TO MOBILIZATION AND TO BE APPROVED BY OWNER AND ENGINEER. POTENTIAL LOCATIONS FOR FIELD OFFICES/TRAILERS SHOWN ON THE SITE PLAN TO BE VERIFIED AND APPROVED BY OWNER AND ENGINEER PRIOR TO MOBILIZATION. PARKING, TEMPORARY STORAGE OF MATERIAL AND EQUIPMENT WILL NOT BE ALLOWED INSIDE THE FACILITIES.
15. ELEVATIONS ARE BASED ON NAVD1988 DATUM AS DETERMINED BY GPS OBSERVATIONS.
16. EACH CCT SHUTDOWN SHALL BE COORDINATED WITH PLANT OPERATIONS.
17. ONLY ONE CCT SHALL BE SHUT DOWN AT A TIME.
18. SEASONAL LIMITATIONS ON CCT SHUTDOWNS:
    - 18.A. FROM APRIL 1 THROUGH NOVEMBER 30, EACH CCT SHUTDOWN SHALL NOT EXCEED 60 DAYS.
    - 18.B. FROM DECEMBER 1 THROUGH MARCH 31, EACH CCT SHUTDOWN SHALL NOT EXCEED 90 DAYS.

SUGGESTED SEQUENCING NOTES

1. STAGING (REFER TO C-004 FOR STAGING AREA LOCATION)
2. SHUTDOWN CCT 4302 (LANDSIDE),
   - 2.A. REMOVE AND INSTALL (2) INFLUENT SLIDE GATES, (1) EFFLUENT WATER SYSTEM INFLUENT GATE AND SLIDE GATE OPERATORS,
   - 2.B. PERFORM CONCRETE DEMOLITION, EXPANSION JOINT AND CONCRETE SPALLING REPAIR AND MODIFICATION WORK,
   - 2.C. REMOVE, MODIFY DRAIN PIPE AND INSTALL (3) MUD VALVES.
3. CCT 4302 TO BE BROUGHT BACK ONLINE AND CCT 4301 (SEASIDE) TO BE SHUTDOWN,
   - 3.A. REMOVE AND INSTALL (2) INFLUENT SLIDE GATES AND SLIDE GATE OPERATORS, (1) EFFLUENT WATER SYSTEM INFLUENT BUTTERFLY VALVE AND VALVE OPERATORS,
   - 3.B. PERFORM EXPANSION JOINT AND CONCRETE SPALLING REPAIR,
   - 3.C. REMOVE AND INSTALL (4) MUD VALVES.
4. CCT 4301 TO BE BROUGHT BACK ONLINE, INSTALL INSTRUMENTS AND RELATED ELECTRICAL CONDUITS ON BOTH CCTS.
5. INSTALL 6" FIRE WATER FORCE MAIN AND CONNECT TO EXISTING SYSTEM, REFER TO C-004.
6. REMOVE AND INSTALL (2) EMERGENCY TANK RETURN PUMPS, (1) CHEMICAL SUMP PUMP AND RELATED ELECTRICAL WORK IN THE METER BUILDING.
7. PROVIDE AND INSTALL TEMPORARY SODIUM HYPOCHLORITE DOSING DEVICE PRIOR TO REMOVING AND INSTALLING INDUCTION MIXER IN COMMON INFLUENT CHANNEL.
8. INSTALL NEW CHLORINATION CONTROL PANEL IN THE CHLORINE BUILDING, MODIFY EMERGENCY TANKS RETURN PUMP CONTROL PANEL IN THE METERING BUILDING, AND MODIFY CONTROL PANEL IN THE CONTROL ROOM IN MAIN BUILDING.

BID SET

SUBMITTAL DATE: 10/2026

GRAPHIC SCALES CHECK BEFORE USE

IF SHEET IS LESS THAN 22" X 34" IT IS A REDUCED PRINT. SCALE ACCORDINGLY

NO.	DATE	REVISIONS/DESCRIPTION	APPR'D.

DESIGNED BY: RH
DRAWN BY: ZA
CHECKED BY: RH
DESIGN LEAD: KAUO HSIEH, P.E.
PROJECT MANAGER: FRANK VISINGARDI, JR., P.E.

STATE OF NEW YORK · FRANK VISINGARDI JR. · 072115 · LICENSED PROFESSIONAL ENGINEER

Environmental Protection

ACCOUNTABLE MANAGER: STELLA UWAECHIE
PORTFOLIO MANAGER: ANDREW NG, P.E.
EXECUTIVE DIRECTOR: KENNETH E. MORIARTY, P.E.

"WARNING-IT IS A VIOLATION, OF THE NEW YORK STATE EDUCATION LAW, SECTION, 7209.2, FOR ANY PERSON, UNLESS (S)HE IS ACTING UNDER THE DIRECTION OF A LICENSED PROFESSIONAL ENGINEER, TO ALTER THIS DOCUMENT IN ANY WAY. IF ALTERED, THE ALTERING PERSON SHALL COMPLY WITH THE REQUIREMENTS OF NEW YORK EDUCATION, LAW, SECTION, 7209.2."

NEW YORK CITY ENVIRONMENTAL PROTECTION
BUREAU OF ENGINEERING DESIGN & CONSTRUCTION
96-05 HORACE HARDING EXPRESSWAY 5th FLOOR
CORONA, NEW YORK 11368
www.nyc.gov/dep

CAPITAL PROJECT WP-282
STATEN ISLAND, NY, OAKWOOD BEACH WRRF
CONTRACT OB-144A

SYMBOLS, ABBREVIATIONS, AND GENERAL NOTES

DATE: OCTOBER 2026
SHEET NO: 3 OF 74
DRAWING NO. G-003.00

Last Saved By:ZALBER Last Date Saved:7/8/2026 9:06 AM Date & Time Plotted: 9/9/2026 9:45 AM
Paper Size Printed/Plotted: ANSI full bleed D (34.00 x 22.00 Inches) Plot Scale:0.997129 Plot Style Table: DEP_BEDC_22x34_ByWeight.ctb
Drawing File Name & Drive Location: C:\pwworking\east01\d4119075\G-003.dwg

All inquiries regarding this drawing(s) or project should be made to NYC Environmental Protection, Bureau of Engineering Design and Construction.

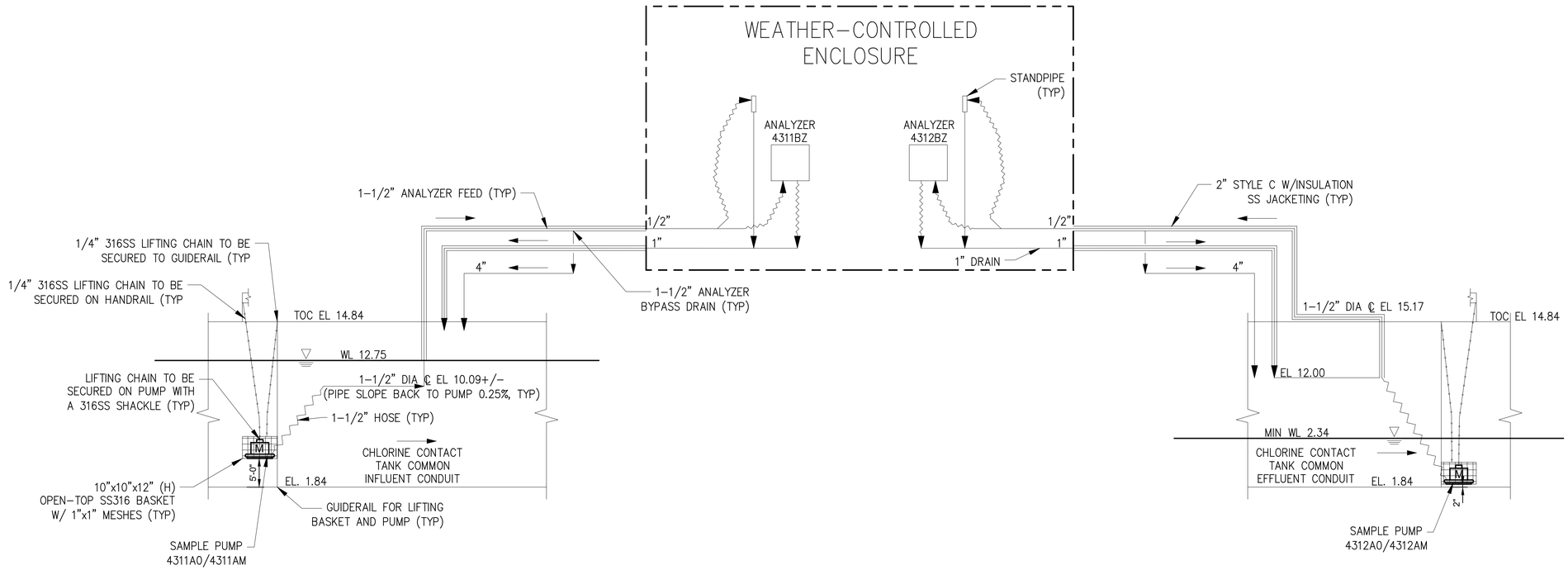

LEGEND:

- M — MOTORIZED SAMPLE PUMP
- FLOW ARROW
- TUBING
- LIFTING BASKET

BID SET

SUBMITTAL DATE: 10/2026

GRAPHIC SCALES CHECK BEFORE USE

IF SHEET IS LESS THAN 22" X 34" IT IS A REDUCED PRINT. SCALE ACCORDINGLY

NO.	DATE	REVISIONS/DESCRIPTION	APPR'D.

DESIGNED BY: KH
DRAWN BY: ZA
CHECKED BY: RH
DESIGN LEAD: KAUO HSIEH, P.E.
PROJECT MANAGER: FRANK VISINGARDI, JR., P.E.

STATE OF NEW YORK FRANK VISINGARDI 072716 LICENSED PROFESSIONAL ENGINEER

Environmental Protection

ACCOUNTABLE MANAGER: STELLA UWAECHIE
PORTFOLIO MANAGER: ANDREW NG, P.E.
EXECUTIVE DIRECTOR: KENNETH E. MORIARTY, P.E.

"WARNING-IT IS A VIOLATION, OF THE NEW YORK STATE EDUCATION LAW, SECTION, 7209.2, FOR ANY PERSON, UNLESS (S)HE IS ACTING UNDER THE DIRECTION OF A LICENSED PROFESSIONAL ENGINEER, TO ALTER THIS DOCUMENT IN ANY WAY. IF ALTERED, THE ALTERING PERSON SHALL COMPLY WITH THE REQUIREMENTS OF NEW YORK EDUCATION, LAW, SECTION, 7209.2."

NEW YORK CITY ENVIRONMENTAL PROTECTION
BUREAU OF ENGINEERING DESIGN & CONSTRUCTION
96-05 HORACE HARDING EXPRESSWAY 5th FLOOR
CORONA, NEW YORK 11368
www.nyc.gov/dep

CAPITAL PROJECT WP-282
STATEN ISLAND, NY, OAKWOOD BEACH WRRF
CONTRACT OB-144A

COLORIMETRIC TRC ANALYZER
PROCESS FLOW DIAGRAM

DATE: OCTOBER 2026
SHEET NO: 4 OF 74
DRAWING NO. G-004.00

All inquiries regarding this drawing(s) or project should be made to NYC Environmental Protection, Bureau of Engineering Design and Construction.

Last Saved By:ZALBER Last Date Saved:7/8/2026 9:07 AM Date & Time Plotted: 9/9/2026 9:46 AM
Paper Size Printed/Plotted: ANSI full bleed D (34.00 x 22.00 Inches) Plot Scale:0.997129 Plot Style Table: DEP_BEDC_22x34_ByWeight.ctb
Drawing File Name & Drive Location: C:\pwworking\east01\d4119075\G-004.dwg

REVISED ASSET ID	LEGACY ASSET ID	FACILITY	SECTOR	ASSET NAME	ASSET DESCRIPTION	LOCATION	LOCATION AREA	GROUP	SYSTEM	SUB-SYSTEM	POSITION ID	EQUIPMENT
	4311A0	OAKWOOD BEACH WRRF	PROCESS	SAMPLE PUMP NO. 1	SAMPLE PUMP #1, CCT COMMON INFLUENT CHANNEL, COLORIMETRIC CHLORINE ANALYZER	CHLORINE CONTACT TANKS	CHLORINE CONTACT TANKS	LABORATORY	INSTRUMENTATION	SUBMERSIBLE PUMP	1	SAMPLE PUMP
	4311AM	OAKWOOD BEACH WRRF	PROCESS	MOTOR, SAMPLE PUMP NO. 1	MOTOR, SAMPLE PUMP #1, CCT COMMON INFLUENT CHANNEL	CHLORINE CONTACT TANKS	CHLORINE CONTACT TANKS	LABORATORY	INSTRUMENTATION	MOTOR – GENERAL	1	SAMPLE PUMP
	4312A0	OAKWOOD BEACH WRRF	PROCESS	SAMPLE PUMP NO. 2	SAMPLE PUMP #2, CCT COMMON EFFLUENT CHANNEL, COLORIMETRIC CHLORINE ANALYZER	CHLORINE CONTACT TANKS	CHLORINE CONTACT TANKS	LABORATORY	INSTRUMENTATION	SUBMERSIBLE PUMP	2	SAMPLE PUMP
	4312AM	OAKWOOD BEACH WRRF	PROCESS	MOTOR, SAMPLE PUMP NO. 2	MOTOR, SAMPLE PUMP #2, CCT COMMON INFLUENT CHANNEL	CHLORINE CONTACT TANKS	CHLORINE CONTACT TANKS	LABORATORY	INSTRUMENTATION	MOTOR – GENERAL	2	SAMPLE PUMP
	4205C0	OAKWOOD BEACH WRRF	UTILITIES	SUMP PUMP #1, METER BUILDING	SUMP PUMP #1, METER BUILDING	METER BUILDING	HYPO PUMP AREA	SAFETY	DRAINAGE SYSTEMS	SUMP PUMP	1	SUMP PUMP
OB1.05.18.011.BQ01.01	4205A0	OAKWOOD BEACH WRRF	PROCESS	EMERGENCY TANKS RETURN PUMP NO. 1	EMERGENCY TANKS RETURN PUMP #1, TRANSFER, SODIUM HYPOCHLORITE FROM EMERGENCY TO BULK TANKS	METER BUILDING	HYPO PUMP AREA	DISINFECTION, ADVANCED TREATMENT	CHEMICAL SUPPLY SYSTEMS (CONTAINMENT AREA)	CENTRIFUGAL PUMP	1	EMERGENCY TANKS RETURN PUMP
OB1.05.18.037.BQ01.01	4205AM	OAKWOOD BEACH WRRF	PROCESS	MOTOR, EMERGENCY TANKS RETURN PUMP NO. 1	MOTOR, EMERGENCY TANKS RETURN PUMP #1	METER BUILDING	HYPO PUMP AREA	DISINFECTION, ADVANCED TREATMENT	CHEMICAL SUPPLY SYSTEMS (CONTAINMENT AREA)	MOTOR – GENERAL	1	EMERGENCY TANKS RETURN PUMP
OB1.05.18.011.BQ01.02	4205B0	OAKWOOD BEACH WRRF	PROCESS	EMERGENCY TANKS RETURN PUMP NO. 2	EMERGENCY TANKS RETURN PUMP #2, TRANSFER, SODIUM HYPOCHLORITE BETWEEN EMERGENCY AND BULK TANKS	METER BUILDING	HYPO PUMP AREA	DISINFECTION, ADVANCED TREATMENT	CHEMICAL SUPPLY SYSTEMS (CONTAINMENT AREA)	CENTRIFUGAL PUMP	2	EMERGENCY TANKS RETURN PUMP
OB1.05.18.037.BQ01.02	4205BM	OAKWOOD BEACH WRRF	PROCESS	MOTOR, EMERGENCY TANKS RETURN PUMP NO. 2	MOTOR, EMERGENCY TANKS RETURN PUMP #2	METER BUILDING	HYPO PUMP AREA	DISINFECTION, ADVANCED TREATMENT	CHEMICAL SUPPLY SYSTEMS (CONTAINMENT AREA)	MOTOR – GENERAL	2	EMERGENCY TANKS RETURN PUMP
OB1.05.01.004.AD01.01	4301A0	OAKWOOD BEACH WRRF	PROCESS	SLIDE GATE NO. 1	SLIDE GATE #1, SEASIDE CCT, INFLUENT	CHLORINE CONTACT TANKS	CHLORINE CONTACT TANKS	DISINFECTION, ADVANCED TREATMENT	FLOW REGULATOR	SLIDE GATE	1	SLIDE GATE
OB1.05.01.248.AD01.01	4301AM	OAKWOOD BEACH WRRF	PROCESS	ELECTRICAL ACTUATOR, SLIDE GATE NO. 1	ELECTRICAL ACTUATOR, SLIDE GATE #1 SEASIDE CCT, INFLUENT	CHLORINE CONTACT TANKS	CHLORINE CONTACT TANKS	DISINFECTION, ADVANCED TREATMENT	FLOW REGULATOR	ELECTRICAL ACTUATOR	1	SLIDE GATE
OB1.05.01.004.AD01.02	4301B0	OAKWOOD BEACH WRRF	PROCESS	SLIDE GATE NO. 2	SLIDE GATE #2 SEASIDE CCT, INFLUENT	CHLORINE CONTACT TANKS	CHLORINE CONTACT TANKS	DISINFECTION, ADVANCED TREATMENT	FLOW REGULATOR	SLIDE GATE	2	SLIDE GATE
OB1.05.01.248.AD01.02	4301BM	OAKWOOD BEACH WRRF	PROCESS	ELECTRICAL ACTUATOR, SLIDE GATE NO. 2	ELECTRICAL ACTUATOR, SLIDE GATE #2 SEASIDE CCT, INFLUENT	CHLORINE CONTACT TANKS	CHLORINE CONTACT TANKS	DISINFECTION, ADVANCED TREATMENT	FLOW REGULATOR	ELECTRICAL ACTUATOR	2	SLIDE GATE
OB1.05.01.004.AD01.03	4302A0	OAKWOOD BEACH WRRF	PROCESS	SLIDE GATE NO. 3	SLIDE GATE #3 LANDSIDE CCT, INFLUENT	CHLORINE CONTACT TANKS	CHLORINE CONTACT TANKS	DISINFECTION, ADVANCED TREATMENT	FLOW REGULATOR	SLIDE GATE	3	SLIDE GATE
OB1.05.01.248.AD01.03	4302AM	OAKWOOD BEACH WRRF	PROCESS	ELECTRICAL ACTUATOR, SLIDE GATE NO. 3	ELECTRICAL ACTUATOR, SLIDE GATE #3 LANDSIDE CCT, INFLUENT	CHLORINE CONTACT TANKS	CHLORINE CONTACT TANKS	DISINFECTION, ADVANCED TREATMENT	FLOW REGULATOR	ELECTRICAL ACTUATOR	3	SLIDE GATE
OB1.05.01.004.AD01.04	4302B0	OAKWOOD BEACH WRRF	PROCESS	SLIDE GATE NO. 4	SLIDE GATE #4 LANDSIDE CCT, INFLUENT	CHLORINE CONTACT TANKS	CHLORINE CONTACT TANKS	DISINFECTION, ADVANCED TREATMENT	FLOW REGULATOR	SLIDE GATE	4	SLIDE GATE
OB1.05.01.248.AD01.04	4302BM	OAKWOOD BEACH WRRF	PROCESS	ELECTRICAL ACTUATOR, SLIDE GATE NO. 4	ELECTRICAL ACTUATOR, SLIDE GATE #4 LANDSIDE CCT, INFLUENT	CHLORINE CONTACT TANKS	CHLORINE CONTACT TANKS	DISINFECTION, ADVANCED TREATMENT	FLOW REGULATOR	ELECTRICAL ACTUATOR	4	SLIDE GATE
OB1.14.01.004.AD01.01	4304A0	OAKWOOD BEACH WRRF	PROCESS	SLIDE GATE NO. 1, EFFLUENT WATER SYSTEM	SLIDE GATE #1, LANDSIDE CCT, INFLUENT, EFFLUENT WATER SYSTEM	CHLORINE CONTACT TANKS	CHLORINE CONTACT TANKS	WATER SYSTEMS	FLOW REGULATOR	SLIDE GATE	1	SLIDE GATE
OB1.14.01.248.AD01.01	4304AM	OAKWOOD BEACH WRRF	PROCESS	ELECTRICAL ACTUATOR, SLIDE GATE NO. 1, EFFLUENT WATER SYSTEM	ELECTRICAL ACTUATOR, SLIDE GATE #1, LANDSIDE CCT, INFLUENT, EFFLUENT WATER SYSTEM	CHLORINE CONTACT TANKS	CHLORINE CONTACT TANKS	WATER SYSTEMS	FLOW REGULATOR	ELECTRICAL ACTUATOR	1	SLIDE GATE
OB1.05.19.262.AD01.01	4212J0	OAKWOOD BEACH WRRF	PROCESS	INDUCTION MIXER NO. 1	INDUCTION MIXER #1, CCT, COMMON INFLUENT CHANNEL	CHLORINE CONTACT TANKS	CHLORINE CONTACT TANKS	DISINFECTION, ADVANCED TREATMENT	CHEMICAL FEEDING / DOSING SYSTEMS (INCL. PUMPS & VALVES)	CHEMICAL MIXER	1	INDUCTION MIXER
OB1.05.19.037.AD01.01	4212JM	OAKWOOD BEACH WRRF	PROCESS	MOTOR, INDUCTION MIXER NO. 1	MOTOR, INDUCTION MIXER #1, CCT, COMMON INFLUENT CHANNEL	CHLORINE CONTACT TANKS	CHLORINE CONTACT TANKS	DISINFECTION, ADVANCED TREATMENT	CHEMICAL FEEDING / DOSING SYSTEMS (INCL. PUMPS & VALVES)	MOTOR – GENERAL	1	INDUCTION MIXER
OB1.14.01.273.AD01.01	4301C0	OAKWOOD BEACH WRRF	PROCESS	BUTTERFLY VALVE NO. 1	BUTTERFLY VALVE #1, 24", SEASIDE CCT, INFLUENT, EFFLUENT WATER SYSTEM	CHLORINE CONTACT TANKS	CHLORINE CONTACT TANKS	WATER SYSTEMS	FLOW REGULATOR	BUTTERFLY VALVE	1	MOTOR OPERATED BUTTERFLY VALVE
OB1.14.01.248.AD02.01	4301CM	OAKWOOD BEACH WRRF	PROCESS	ELECTRICAL ACTUATOR, BUTTERFLY VALVE NO. 1	ELECTRICAL ACTUATOR, BUTTERFLY VALVE #1, 24", SEASIDE CCT, INFLUENT, EFFLUENT WATER SYSTEM	CHLORINE CONTACT TANKS	CHLORINE CONTACT TANKS	WATER SYSTEMS	FLOW REGULATOR	ELECTRICAL ACTUATOR	1	MOTOR OPERATED BUTTERFLY VALVE
OB1.05.53.019.AD01.01		OAKWOOD BEACH WRRF	PROCESS	MUD VALVE NO. 1	MUD VALVE #1, 12", SEASIDE CCT FOR TANK DRAIN	CHLORINE CONTACT TANKS	CHLORINE CONTACT TANKS	DISINFECTION, ADVANCED TREATMENT	DRAINAGE SYSTEMS	VALVE – GENERAL	1	MUD VALVE
OB1.05.53.019.AD01.02		OAKWOOD BEACH WRRF	PROCESS	MUD VALVE NO. 2	MUD VALVE #2, 12", SEASIDE CCT FOR TANK DRAIN	CHLORINE CONTACT TANKS	CHLORINE CONTACT TANKS	DISINFECTION, ADVANCED TREATMENT	DRAINAGE SYSTEMS	VALVE – GENERAL	2	MUD VALVE
OB1.05.53.019.AD01.03		OAKWOOD BEACH WRRF	PROCESS	MUD VALVE NO. 3	MUD VALVE #3, 12", SEASIDE CCT FOR TANK DRAIN	CHLORINE CONTACT TANKS	CHLORINE CONTACT TANKS	DISINFECTION, ADVANCED TREATMENT	DRAINAGE SYSTEMS	VALVE – GENERAL	3	MUD VALVE
OB1.05.53.019.AD01.04		OAKWOOD BEACH WRRF	PROCESS	MUD VALVE NO. 4	MUD VALVE #4, 12", SEASIDE CCT FOR TANK DRAIN	CHLORINE CONTACT TANKS	CHLORINE CONTACT TANKS	DISINFECTION, ADVANCED TREATMENT	DRAINAGE SYSTEMS	VALVE – GENERAL	4	MUD VALVE
OB1.05.53.019.AD01.05		OAKWOOD BEACH WRRF	PROCESS	MUD VALVE NO. 5	MUD VALVE #5, 12", LANDSIDE CCT FOR TANK DRAIN	CHLORINE CONTACT TANKS	CHLORINE CONTACT TANKS	DISINFECTION, ADVANCED TREATMENT	DRAINAGE SYSTEMS	VALVE – GENERAL	5	MUD VALVE
OB1.05.53.019.AD01.06		OAKWOOD BEACH WRRF	PROCESS	MUD VALVE NO. 6	MUD VALVE #6, 12", LANDSIDE CCT FOR TANK DRAIN	CHLORINE CONTACT TANKS	CHLORINE CONTACT TANKS	DISINFECTION, ADVANCED TREATMENT	DRAINAGE SYSTEMS	VALVE – GENERAL	6	MUD VALVE
OB1.05.53.019.AD01.07		OAKWOOD BEACH WRRF	PROCESS	MUD VALVE NO. 7	MUD VALVE #7, 12", LANDSIDE CCT FOR TANK DRAIN	CHLORINE CONTACT TANKS	CHLORINE CONTACT TANKS	DISINFECTION, ADVANCED TREATMENT	DRAINAGE SYSTEMS	VALVE – GENERAL	7	MUD VALVE
OB1.05.08.027.AD01.01	430100	OAKWOOD BEACH WRRF	PROCESS	CHLORINE CONTACT TANK NO. 1	CHLORINE CONTACT TANK #1	CHLORINE CONTACT TANKS	CHLORINE CONTACT TANKS	DISINFECTION, ADVANCED TREATMENT	CONCRETE TANKS	CHLORINE CONTACT TANK	1	CHLORINE CONTACT TANK
OB1.05.08.027.AD01.02	430200	OAKWOOD BEACH WRRF	PROCESS	CHLORINE CONTACT TANK NO. 2	CHLORINE CONTACT TANK #2	CHLORINE CONTACT TANKS	CHLORINE CONTACT TANKS	DISINFECTION, ADVANCED TREATMENT	CONCRETE TANKS	CHLORINE CONTACT TANK	2	CHLORINE CONTACT TANK
OB3.12.36.144.AD01.01	DS-4301AM	OAKWOOD BEACH WRRF	UTILITIES	DISCONNECT SWITCH NO. 1	DISCONNECT SWITCH #1, SLIDE GATE #1	CHLORINE CONTACT TANKS	CHLORINE CONTACT TANKS	ELECTRICAL DISTRIBUTION	POWER CONTROL – REMOTE	TRANSFER / DISCONNECT SWITCH	1	DISCONNECT SWITCH
OB3.12.36.144.AD01.02	DS-4301BM	OAKWOOD BEACH WRRF	UTILITIES	DISCONNECT SWITCH NO. 2	DISCONNECT SWITCH #2 , SLIDE GATE #2	CHLORINE CONTACT TANKS	CHLORINE CONTACT TANKS	ELECTRICAL DISTRIBUTION	POWER CONTROL – REMOTE	TRANSFER / DISCONNECT SWITCH	2	DISCONNECT SWITCH
OB3.12.36.144.AD01.03	DS-4302AM	OAKWOOD BEACH WRRF	UTILITIES	DISCONNECT SWITCH NO. 3	DISCONNECT SWITCH #3 , SLIDE GATE #3	CHLORINE CONTACT TANKS	CHLORINE CONTACT TANKS	ELECTRICAL DISTRIBUTION	POWER CONTROL – REMOTE	TRANSFER / DISCONNECT SWITCH	3	DISCONNECT SWITCH
OB3.12.36.144.AD01.04	DS-4302BM	OAKWOOD BEACH WRRF	UTILITIES	DISCONNECT SWITCH NO. 4	DISCONNECT SWITCH #4, SLIDE GATE #4	CHLORINE CONTACT TANKS	CHLORINE CONTACT TANKS	ELECTRICAL DISTRIBUTION	POWER CONTROL – REMOTE	TRANSFER / DISCONNECT SWITCH	4	DISCONNECT SWITCH
OB3.12.36.144.AD01.05	DS-4304AM	OAKWOOD BEACH WRRF	UTILITIES	DISCONNECT SWITCH NO. 5	DISCONNECT SWITCH #5 , SLIDE GATE #5	CHLORINE CONTACT TANKS	CHLORINE CONTACT TANKS	ELECTRICAL DISTRIBUTION	POWER CONTROL – REMOTE	TRANSFER / DISCONNECT SWITCH	5	DISCONNECT SWITCH
OB3.12.36.144.AD01.06	DS-4303AM	OAKWOOD BEACH WRRF	UTILITIES	DISCONNECT SWITCH NO. 6	DISCONNECT SWITCH #6, BUTTERFLY VALVE #1	CHLORINE CONTACT TANKS	CHLORINE CONTACT TANKS	ELECTRICAL DISTRIBUTION	POWER CONTROL – REMOTE	TRANSFER / DISCONNECT SWITCH	6	DISCONNECT SWITCH
OB3.12.36.144.AD01.07		OAKWOOD BEACH WRRF	UTILITIES	DISCONNECT SWITCH NO. 7	DISCONNECT SWITCH #7, INDUCTION MIXER #1	CHLORINE CONTACT TANKS	CHLORINE CONTACT TANKS	ELECTRICAL DISTRIBUTION	POWER CONTROL – REMOTE	TRANSFER / DISCONNECT SWITCH	7	DISCONNECT SWITCH
OB3.12.37.267.BQ01.04	MPC-4	OAKWOOD BEACH WRRF	UTILITIES	MINI-POWER CENTER NO. 4	POWER PANEL #12, 120V POWER DISTRIBUTION, MINI-POWER CENTER #4, MCC #12	METER BUILDING	HYPO PUMP AREA	ELECTRICAL DISTRIBUTION	POWER DELIVERY / DISTRIBUTION	POWER PANEL	4	MINI-POWER CENTER
OB3.05.29.094.AD01.01	MCP-4212J0	OAKWOOD BEACH WRRF	UTILITIES	INDUCTION MIXER CONTROL PANEL NO. 1	CONTROL PANEL, INDUCTION MIXER #1, MCC #12/PP #12	CHLORINE CONTACT TANKS	CHLORINE CONTACT TANKS	DISINFECTION, ADVANCED TREATMENT	INDUSTRIAL CONTROL SYSTEMS	LOCAL POWER CONTROL – LOCAL CONTROL PANEL	1	INDUCTION MIXER CONTROL PANEL
OB3.12.36.144.BQ01.01	DS-4205AM	OAKWOOD BEACH WRRF	UTILITIES	DISCONNECT SWITCH NO. 1	DISCONNECT SWITCH #1, EMERGENCY TANKS RETURN PUMP #1	METER BUILDING	HYPO PUMP AREA	ELECTRICAL DISTRIBUTION	POWER CONTROL – REMOTE	TRANSFER / DISCONNECT SWITCH	1	DISCONNECT SWITCH
OB3.12.36.144.BQ01.02	DS-4205CM	OAKWOOD BEACH WRRF	UTILITIES	DISCONNECT SWITCH NO. 2	DISCONNECT SWITCH #2, EMERGENCY TANKS RETURN PUMP #2	METER BUILDING	HYPO PUMP AREA	ELECTRICAL DISTRIBUTION	POWER CONTROL – REMOTE	TRANSFER / DISCONNECT SWITCH	2	DISCONNECT SWITCH
OB3.19.29.094.BQ01.01	MCP-4205CM	OAKWOOD BEACH WRRF	UTILITIES	SUMP PUMP NO. 1 CONTROL PANEL	LOCAL CONTROL PANEL, SUMP PUMP #1, MCC #12/PP #12	METER BUILDING	HYPO PUMP AREA	SAFETY	INDUSTRIAL CONTROL SYSTEMS	LOCAL POWER CONTROL – LOCAL CONTROL PANEL	1	SUMP PUMP CONTROL PANEL

BID SET

SUBMITTAL DATE: 10/2026

GRAPHIC SCALES CHECK BEFORE USE

IF SHEET IS LESS THAN 22" X 34" IT IS A REDUCED PRINT. SCALE ACCORDINGLY

NO.	DATE	REVISIONS/DESCRIPTION	APPR'D.

DESIGNED BY: KH
DRAWN BY: ZA
CHECKED BY: RH
DESIGN LEAD: KAUO HSIEH, P.E.
PROJECT MANAGER: FRANK VISINGARDI, JR., P.E.

ACCOUNTABLE MANAGER: STELLA UWAECHIE
PORTFOLIO MANAGER: ANDREW NG, P.E.
EXECUTIVE DIRECTOR: KENNETH E. MORIARTY, P.E.

"WARNING-IT IS A VIOLATION, OF THE NEW YORK STATE EDUCATION LAW, SECTION, 7209.2, FOR ANY PERSON, UNLESS (S)HE IS ACTING UNDER THE DIRECTION OF A LICENSED PROFESSIONAL ENGINEER, TO ALTER THIS DOCUMENT IN ANY WAY. IF ALTERED, THE ALTERING PERSON SHALL COMPLY WITH THE REQUIREMENTS OF NEW YORK EDUCATION, LAW, SECTION, 7209.2."

NEW YORK CITY ENVIRONMENTAL PROTECTION
BUREAU OF ENGINEERING DESIGN & CONSTRUCTION
96-05 HORACE HARDING EXPRESSWAY 5th FLOOR
CORONA, NEW YORK 11368
www.nyc.gov/dep

CAPITAL PROJECT WP-282
STATEN ISLAND, NY, OAKWOOD BEACH WRRF
CONTRACT OB-144A
ASSET LIST

DATE: OCTOBER 2026
SHEET NO: 5 OF 74
DRAWING NO. G-005.00

Last Saved By:ZALBER Last Date Saved:7/8/2026 9:08 AM Date & Time Plotted: 9/9/2026 9:47 AM
Paper Size Printed/Plotted: ANSI full bleed D (34.00 x 22.00 Inches) Plot Scale:1:1 Plot Style Table: DEP_BEDC_22x34_ByWeight.ctb
Drawing File Name & Drive Location: C:\pwworking\east01\d4139075\G-005.dwg

All inquiries regarding this drawing(s) or project should be made to NYC Environmental Protection, Bureau of Engineering Design and Construction.

SYMBOLOGY

- EXISTING WATER MAIN
- PROPOSED WATER MAIN
- BURIED VALVE W/ VALVE BOX
- CHAIN LINK FENCE
- YARD HYDRANT
- EXISTING CURB

ABBREVIATIONS

±	PLUS/MINUS
AB	ANCHOR BOLT
ADD'L	ADDITIONAL
AFF	ABOVE FINISHED FLOOR
ALUM	ALUMINUM
AVG	AVERAGE
BC	BOTTOM OF CURB
BOS	BOTTOM OF STEEL
BU	BUTTERFLY VALVE
BV	BALL VALVE
CB	CATCH BASIN
CB	CONCRETE BEAM
CC	CENTER TO CENTER
CCT	CHLORINE CONTACT TANK
CL	CLEAR
℄	CENTERLINE
COL	COLUMN
CONC	CONCRETE
CV	CHECK VALVE
CTR	CENTER
CW	COLD WATER
D	DRAIN
DET	DETAIL
DI/DIP	DUCTILE IRON PIPE
DIA/ø	DIAMETER
DIM(S)	DIMENSION(S)
DWG(S)	DRAWING(S)
DWLS	DOWELS
E	EAST
EA	EACH
EL,ELEV	ELEVATION
ETC	ET CETERA
FIN	FINISH(ED)
FIN FL	FINISHED FLOOR
FLR	FLOOR
FM	FORCE MAIN
FT	FOOT
GAL	GALLON
GALV	GALVANIZED STEEL
GV	GATE VALVE
HOR,H	HORIZONTAL
HR	HANDRAIL
HP	HIGH POINT
H&V	HEATING AND VENTILATING
HW	HOT WATER
HYD	HYDRANT
ID	INSIDE DIAMETER
INSUL	INSULATION
INT	INTERIOR
INV EL/IE	INVERT ELEVATION
JT	JOINT
K	KIPS
LBS	POUNDS
LF	LINEAR FEET
LG	LONG
LL	LOW LEVEL
LP	LOW POINT/LIGHT POLE
MAX	MAXIMUM
MECH	MECHANICAL
MFG	MANUFACTURING
MFTR	MANUFACTURER
MIN	MINIMUM
MH	MANHOLE
MJ	MECHANICAL JOINT
MO	MASONRY OPENING
N	NORTH
NC	NORMALLY CLOSED
NF	NEAR FACE
NO/#	NUMBER
NOM	NOMINAL
NP	NON-POTABLE WATER
NRS	NON-RISING STEM
NTS	NOT TO SCALE
OC	ON CENTER
OD	OUTSIDE DIAMETER
OF	OVERFLOW
OHW	OVERHEAD WIRE
OPNG	OPENING
OPP	OPPOSITE
PCE, PCS	PIECE (S)
PERM	PERMANENT
PI	PRESSURE INDICATOR
ℙ	PLATE, PROPERTY LINE
PLATF	PLATFORM
PRESS	PRESSURE
PRV	PRESSURE RELIEF VALVE
PS	PUMP STATION
PSF	POUNDS PER SQUARE FOOT
PST	PRIMARY SETTLING TANKS
PV	PLUG VALVE
PVC	POLYVINYL CHLORIDE PIPE
PVMT	PAVEMENT
QTY	QUANTITY
RAD	RADIUS
RD	ROOF DRAIN
REF	REFERENCE
REINF	REINFORCE,REINFORCING
REQ'D	REQUIRED
RJ	RESTRAINED JOINT
RPZ	REDUCED PRESSURE ZONE BACKFLOW PREVENTER
S	SEWER
SAN	SANITARY DRAIN
SCH	SCHEDULE
SD	STORM DRAIN
SF	SILT FENCE/SQUARE FEET
SN	SIGN
SPECS	SPECIFICATIONS
SQ	SQUARE
SQ FT	SQUARE FEET
SS	STAINLESS STEEL
STD	STANDARD
STIFF	STIFFENER
STRUCT	STRUCTURAL
SW	SIDEWALK
SYM	SYMMETRICAL
T	TOP
T&B	TOP AND BOTTOM
TEMP	TEMPORARY
TK	TANK
TOC	TOP OF CONCRETE
TOD	TOP OF DUCT
TOS	TOP OF STEEL/SLAB
TOW	TOP OF WALL
TYP	TYPICAL
UGE	UNDERGROUND ELECTRIC
UN, UNO, UON	UNLESS NOTED OTHERWISE
VB	VACUUM BREAKER
VER,V	VERTICAL
VTR	VENT THROUGH ROOF
W/	WITH
WP	WORKING POINT
WS	WATER STOP
WV	WATER VALVE
WWF	WELDED WIRE FABRIC

GENERAL NOTES

1. ALL DIMENSIONS ARE TO EDGE OF STRUCTURES, FACE OF CURBS OR EDGE OF PAVEMENTS UNLESS SPECIFICALLY INDICATED OR OTHERWISE NOTED.
2. EXISTING UTILITIES AND BURIED PIPING LOCATIONS AND ELEVATIONS SHOWN ON THE DRAWINGS ARE APPROXIMATE AND ARE INTENDED ONLY TO INDICATE THE EXISTENCE OF SUCH UTILITIES AND PIPING IN AREA SHOWN. BEFORE PROCEEDING WITH WORK, THE CONTRACTOR SHALL VERIFY UTILITIES AND PIPING LOCATIONS IN THE FIELD AND NOTIFY THE ENGINEER OF ANY DISCREPANCIES.
3. THE CONTRACTOR IS HEREBY NOTIFIED THAT THE WORK INCLUDED UNDER THIS CONTRACT SHALL BE CONDUCTED IN SUCH A MANNER TO PERMIT NORMAL OPERATIONS OF THE FACILITIES AS DEFINED IN THE SPECIFICATIONS.
4. THE CONTRACTOR SHALL MAINTAIN ACCESS TO ALL FACILITIES AT ALL TIMES. NO ROAD SHALL BE TAKEN OUT OF SERVICE EXCEPT TO ACCOMPLISH WORK REQUIRED UNDER THIS CONTRACT AND THEN ONLY AFTER AN ALTERNATIVE METHOD OF ACCESS HAS BEEN APPROVED BY THE ENGINEER. THE CONTRACTOR SHALL PROVIDE TRENCH PLATES FOR VEHICLE CROSSINGS.
5. AT VARIOUS TIMES DURING THE WORK INCLUDED UNDER THIS CONTRACT, IT MAY BE NECESSARY TO SHUT DOWN CERTAIN OPERATING SYSTEMS. OPERATION OF THE FACILITIES SHALL NOT BE AFFECTED. OPERATION OF ALL VALVES, GATES AND CITY EQUIPMENT SHALL BE BY NYCDEP PERSONNEL. ALL REQUIRED SYSTEM OR PARTIAL SYSTEM SHUTDOWNS SHALL BE COORDINATED WITH, AND SCHEDULED AT TIMES SUITABLE TO THE DEP. SHUTDOWNS SHALL NOT COMMENCE UNTIL ALL REQUIRED MATERIALS ARE ON HAND AND READY FOR INSTALLATION. AT A TIME APPROVED BY THE DEP, THE CONTRACTOR SHALL PROCEED CONTINUOUSLY, START TO FINISH, UNTIL THE WORK IS COMPLETED AND THE SYSTEM IS TESTED AND READY FOR OPERATION.
6. ALL UTILITIES AND BURIED PIPING SHALL BE PROTECTED FROM ANY DAMAGE AS A RESULT OF THE WORK INCLUDED IN THIS CONTRACT. IT SHALL BE THE RESPONSIBILITY OF THE CONTRACTOR TO REPAIR AND/OR REPLACE TO THE SATISFACTION OF THE UTILITY OWNER CONCERNED OR THE DEP ALL DAMAGE TO ANY UTILITIES, AND PIPING.
7. EXISTING MANHOLES, FIRE HYDRANTS, VALVES AND INLETS SHALL BE ADJUSTED TO MEET THE PROPOSED GRADES.
8. ALL AREAS DISTURBED BY THE CONTRACTOR SHALL BE RESTORED TO THEIR ORIGINAL CONDITION OR AS INDICATED ON THE CONTRACT DRAWINGS.
9. REFER TO THE SPECIFICATIONS FOR REQUIREMENTS OF PIPE AND VALVE HANGERS SUPPORTS. THE CONTRACTOR SHALL NOT USE EXISTING PIPE AND VALVE SUPPORTS FOR SUPPORT OF PIPING AND VALVES REQUIRED UNDER THIS CONTRACT.
10. FOR CLARITY A SIGNIFICANT AMOUNT OF EXISTING PIPING IS NOT SHOWN ON THESE CONTRACT DRAWINGS. IT IS THE CONTRACTORS RESPONSIBILITY TO ROUTE ALL NEW PIPING IN AN ACCEPTABLE AND APPROVED MANNER AVOIDING OBSTRUCTIONS, AND TO REROUTE NEW AND EXISTING PIPING AS SHOWN, DIRECTED OR AS NECESSARY TO ALLOW FOR THE INSTALLATION OF THE NEW EQUIPMENT.
11. SOME DRAWINGS ARE DIAGRAMMATIC IN NATURE AND INDICATE THE GENERAL ARRANGEMENTS OF THE VARIOUS SYSTEMS AND THE APPROXIMATE RELATIVE LOCATIONS OF THE EQUIPMENT/DEVICES/ITEMS. IT SHALL BE THE RESPONSIBILITY OF THE CONTRACTOR TO DETERMINE THAT THERE IS ADEQUATE SPACE AT THE LOCATIONS INDICATED FOR ALL THE EQUIPMENT/DEVICES/ITEMS PRIOR TO INSTALLATION OF SAME.
12. ALL EXISTING ABOVEGROUND AND UNDERGROUND STRUCTURES, UTILITIES AND PIPING ARE SHOWN ON THESE DRAWINGS BASED ON AVAILABLE INFORMATION PROVIDED TO THE ENGINEER AT THE TIME THESE DRAWINGS WERE CREATED, AND NOT TO PURPORT TO SHOW ACTUAL CONDITIONS. THE CONTRACTOR SHALL VERIFY LOCATIONS OF ALL UTILITIES, EQUIPMENT, DEVICES, WIRING, STRUCTURES, PIPING, ETC. EITHER EXPOSED OR CONCEALED. IT IS THE INTENT OF THESE DRAWINGS TO SHOW ALL ABOVEGROUND AND UNDERGROUND STRUCTURES AS REQUIRED TO COMPLETE THE WORK; HOWEVER IT SHALL BE THE CONTRACTORS RESPONSIBILITY TO VERIFY THAT ALL EXISTING UTILITIES AND OTHER ITEMS, WHETHER SHOWN ON THESE DRAWINGS OR NOT, HAVE BEEN PROPERLY LOCATED.
13. CONTRACTOR SHALL PROTECT ALL EXISTING STRUCTURES AND EQUIPMENT ADJACENT TO THE WORK AND PROTECT, SUPPORT AND RELOCATE, IF NECESSARY, ALL EXPOSED LINES AND MAKE COMPLETE RESTORATION OF DAMAGED PIPING, CONDUIT, WIRING, CABLES AND APPURTENANCES AT NO COST TO THE OWNER OF SAID UTILITIES, AUTHORITIES OR ENGINEERS.
14. DIMENSIONS ON PLANS SHALL BE VERIFIED IN THE FIELD AND ANY DISCREPANCIES THAT WILL AFFECT THE ABILITY TO COMPLETE WORK IN A SATISFACTORY MANNER SHALL BE REPORTED TO THE ENGINEER.
15. IT IS THE CONTRACTORS RESPONSIBILITY TO VISIT THE SITE AND FAMILIARIZE THEMSELVES WITH THE CONTRACT REQUIREMENTS BEFORE BIDDING ON THE CONTRACT.
16. ALL PIPE LINE ELEVATIONS ARE CENTERLINE ELEVATIONS UNLESS INDICATED OTHERWISE.
17. THE CONTRACTOR SHALL INSTALL PIPE UNION FITTINGS AS SHOWN, WHERE REQUIRED, AND AS DIRECTED BY THE ENGINEER IN ORDER TO PERMIT DISASSEMBLY, SERVICE AND REPLACEMENT OF EQUIPMENT.
18. THE CONTRACTOR SHALL COORDINATE THE WORK UNDER THIS CONTRACT WITH THE WORK UNDER ALL OTHER CONTRACTS ONGOING WITHIN AND AROUND THE PLANT SITE.
19. CONTRACTOR SHALL PROVIDE NETTING OR AN ALTERNATIVE FORM OF PROTECTION TO PREVENT CONSTRUCTION DEBRIS FROM ENTERING THE CHLORINE CONTACT TANKS.

WATER MAIN NOTES:

1. ALL WATER MAIN WORK AND MATERIALS SHALL BE DONE IN ACCORDANCE WITH THE CONTRACT PLANS AND IN CONFORMANCE WITH THE NEW YORK CITY DEPARTMENT OF ENVIRONMENTAL PROTECTION (NYCDEP) STANDARD WATER MAIN SPECIFICATIONS, APPLICABLE STANDARD DRAWINGS, AND SPECIFIC CONTRACT REQUIREMENTS.
2. CONTRACTOR SHALL NOTIFY THE FIRE DEPARTMENT AND NYCDEP SITE MANAGER A WEEK IN ADVANCE OF ANY PLANNED SHUTDOWNS OF EXISTING WATER MAINS. NO REMOVAL SHALL TAKE PLACE BEFORE SHUT-OFF VALVES HAVE BEEN CLOSED BY THE NYCDEP PERSONNEL.
3. THE ALIGNMENT OF THE WATER MAINS AND THE LOCATIONS OF THE VALVES AND HYDRANTS ARE SHOWN SCHEMATICALLY. THE EXACT ALIGNMENTS SHALL BE DETERMINED IN THE FIELD BY THE ENGINEER, AS THE WORK PROGRESSES.
4. THE CONTRACTOR SHALL SUBMIT DETAILS AND/OR SHOP DRAWINGS TO THE NYCDEP FOR APPROVAL ONE (1) MONTH PRIOR TO START OF CONSTRUCTION.
5. ALL DUCTILE IRON WATER MAINS UP TO AND INCLUDING 24" DIAMETER SHALL HAVE RESTRAINED JOINTS AND SHALL BE CEMENT LINED AS PER NYCDEP STANDARD "SPECIFICATIONS FOR DUCTILE IRON PIPE WITH PUSH-ON JOINTS AND DUCTILE IRON FITTINGS WITH MECHANICAL JOINTS 6" THROUGH 48" IN DIAMETER," LATEST REVISIONS. ALL FITTINGS SHALL EMPLOY FULL BODY TYPE MECHANICAL JOINTS WITH RETAINER GLANDS AND SHALL CONFORM TO THE REQUIREMENTS OF NYCDEP "STANDARD SPECIFICATIONS FOR DUCTILE-IRON AND GRAY-IRON FITTINGS, 3" TO 48" IN DIAMETER," LATEST REVISION.
6. ALL WATER MAIN VALVES SHALL BE DUCTILE IRON GATE VALVES IN ACCORDANCE WITH NYCDEP STANDARD SPECIFICATIONS, FOR GATE VALVES 3" – 20" IN DIAMETER, LATEST REVISIONS. ACCESS TO WATER VALVES WITHIN THE WORK AREA SHALL BE MAINTAINED AT ALL TIMES.
7. NEW VALVES AND VALVE BOXES SHALL BE CONSTRUCTED ACCORDING TO NYCDEP STANDARD DETAIL NO. 11526-4-2.
8. PRIOR TO CONNECTING THE NEW MAINS TO THE EXISTING ONES, IT MUST BE MADE ABSOLUTELY CERTAIN THAT ALL THE REPLACEMENT/RESTRAINT REQUIREMENTS DUE TO NEWLY INSTALLED VALVES AND FITTINGS ARE FULLY MET. THE CONTRACTOR WILL BE HELD RESPONSIBLE FOR ANY DAMAGE TO PROPERTY AND FOR PERSONNEL INJURY CAUSED BY NEGLIGENCE OR OMISSION REGARDING COMPLIANCE WITH THE REPLACEMENT/RESTRAINT REQUIREMENTS. FOR TYPICAL MINIMUM LENGTHS OF REQUIRED REPLACEMENT/RESTRAINT, SEE TABLE A8-2 IN "STANDARD SPECIFICATIONS FOR DUCTILE-IRON PIPE WITH PUSH-ON JOINTS AND DUCTILE-IRON FITTINGS WITH MECHANICAL JOINTS 6" TO 48," LATEST REVISION.
9. ALL EXISTING SEWERS AND SEWER HOUSE CONNECTIONS SHOULD BE CONTINUOUSLY MAINTAINED DURING CONSTRUCTION OF THE WATER MAIN. IF ANY SEWER OR SEWER HOUSE CONNECTION IS TO BE DISCONNECTED FOR CONSTRUCTION PURPOSES, FLOW SHALL BE MAINTAINED BY FLUSHING OR OTHER SUITABLE MEANS AS DIRECTED BY THE ENGINEER AND IN SUCH A MANNER THAT NO BACK-UPS OCCUR. EXISTING SEWERS, HOUSE CONNECTIONS OR OTHER SEWER APPURTENANCES WHICH ARE TO REMAIN, AND WHICH MIGHT BE DISTURBED FOR CONSTRUCTION PURPOSES, SHALL BE RESTORED TO THEIR PRESENT CONDITIONS AFTER COMPLETION OF THE WORK, AND DAMAGE DONE AS A RESULT OF THE WORK SHALL BE REPAIRED AT NO EXTRA COST TO THE CITY.
10. ALL TAPS AND WET CONNECTIONS ON THE EXISTING WATER MAIN SHOULD BE TRANSFERRED TO THE NEW MAIN, AND ALL SERVICES SHOULD BE INSTALLED PERPENDICULAR TO THE DISTRIBUTION MAIN.
11. ALL WET TAPS SHALL BE MADE BY A NYC LICENSED MASTER PLUMBER.
12. ALL HYDRANTS SHALL BE MAINTAINED IN SERVICE AS PER NEW YORK CITY FIRE DEPARTMENT REQUIREMENTS. HYDRANTS SHALL BE "BREAKAWAY" TYPE AND SHALL HAVE HYDRANT FENDERS AS PER NYCDEP STANDARDS.
13. HYDRANTS ARE TO BE RELOCATED WHEN IN PHYSICAL INTERFERENCE WITH THE STRUCTURE AND WHERE ORDERED BY THE ENGINEER. REMOVED HYDRANTS ARE TO BE RETURNED TO THE NYCDEP YARD.
14. ALL EXCAVATION SHALL BE DONE BY HAND WITHIN ONE FOOT (1'-0") OF EXISTING WATER MAINS, SEWERS, HOUSE CONNECTIONS, DRAINS AND OTHER UTILITIES.

14a. FOR WATER MAINS INSTALLED PARALLEL TO SEWERS:

WHERE THE DEPTH TO THE BOTTOM OF THE SEWER CRADLE IS LESS THAN TEN (10) FEET, THE CLEARANCE BETWEEN THE OUTSIDE OF THE WATER MAIN AND THE CENTERLINE OF THE EXISTING SEWER SHOULD NOT BE LESS THAN SIX (6) FEET PLUS ONE-HALF THE SEWER DIAMETER. WHERE THE DEPTH OF THE BOTTOM OF THE SEWER CRADLE IS TEN (10) FEET OR MORE, THE CLEARANCE BETWEEN THE OUTSIDE OF THE WATER MAIN AND THE CENTERLINE OF THE EXISTING SEWER SHALL BE INCREASED ONE FOOT FOR EACH ADDITIONAL FIVE (5) FEET OF DEPTH OVER TEN (10) FEET, OR PORTION THEREOF.

15. FOR WATER MAINS CROSSING SEWERS:

WHEREVER THE CLEARANCE BETWEEN THE TOP OF AN EXISTING SEWER AND THE BOTTOM OF THE PROPOSED WATER MAIN, AT THEIR CROSSING, IS LESS THAN ONE (1) FOOT, THE WATER MAIN IS TO BE SUPPORTED BY A TRUSS ARRANGEMENT AND THE CLEARANCE SPACE IS TO BE FILLED WITH LAYERS OF COMPRESSIBLE MATERIAL TO AVOID EXCESSIVE BEARING PRESSURE ON THE SEWER PIPE. IN NO CASE, HOWEVER, SHOULD THIS CLEARANCE BE LESS THAN SIX (6) INCHES.

16. ALL WATER MAINS WITH A COVER LESS THAN 2'-6" SHALL BE PROTECTED BY SHALLOW COVER PROTECTION. TYPE AND SIZE OF THE SHALLOW COVER PROTECTION SHALL BE AS SPECIFIED ON NYCDEP BUREAU OF WATER SUPPLY DETAIL "METHOD FOR PROTECTING DI WATER MAINS WITH SHALLOW (LESS THAN 24") COVER", RE. 2.10.87.
17. AFTER WATER MAIN WORK UNDER THE CONTRACT IS SATISFACTORILY COMPLETED, THE CONTRACTOR SHALL SUBMIT FIVE (5) COMPLETE SETS OF AS-BUILT DRAWINGS, APPROVED BY THE ENGINEER, FOR THE BUREAU OF WATER AND SEWER OPERATION FILES.
18. CONTRACTOR SHALL MAINTAIN 4-FEET OF COVER OVER ALL WATER MAINS AND THE COVER SHALL NOT BE LESS THAN 2-FEET. DUE TO FIELD CONDITIONS, IF WATER MAINS HAVE LESS THAN 3-FEET OF COVER, BUT MORE THAN OR EQUAL TO 2-FEET OF COVER, PIER AND PLATE THE WATER MAIN IN ACCORDANCE WITH NYCDEP STANDARD DRAWINGS NUMBERS: 4546-2, 42063-Y, AND 22785. IF ADJACENT UTILITY INTERFERENCES RESTRICT THE CONSTRUCTION OF PIER AND PLATE AS PER NYCDEP STANDARD DRAWINGS, THE CONTRACTOR SHALL SUBMIT CUSTOMIZED SHOP DRAWINGS FOR PIER AND PLATE DETAILS FOR THE WATER MAIN CONSTRUCTION FOR NYCDEP APPROVAL.
19. OPEN ENDS OF ALL ABANDONED WATER MAINS SHALL BE PLUGGED WITH CONCRETE FOR MINIMUM LENGTH OF THREE (3) FEET.
20. THE ATTENTION OF THE CONTRACTOR IS CALLED TO THE FACT THAT WORK MAY BE REQUIRED DURING THE PERIOD FROM DECEMBER 15 TO MARCH 15. THE ENGINEER RESERVES THE RIGHT, HOWEVER, TO DISCONTINUE WORK AT ANY TIME BETWEEN THE PERIOD OF DECEMBER 15 TO MARCH 15, IF IN THEIR OPINION, WEATHER OR FROST CONDITIONS ARE SUCH THAT SATISFACTORY WORK OR BACKFILL CANNOT BE OBTAINED. WATER SUPPLY SHUTDOWNS WILL NOT BE PERMITTED UNLESS THE 9:30AM TEMPERATURE IS AT LEAST 27 DEGREES F AND RISING. NO ADDITIONAL MONIES WILL BE ALLOWED THE CONTRACTOR BECAUSE OF SUCH DISCONTINUANCE.
21. SHUT DOWN SEQUENCE SHALL BE PER DIRECTION OF DEP BWSO.

BID SET

SUBMITTAL DATE: 10/2026

GRAPHIC SCALES CHECK BEFORE USE

IF SHEET IS LESS THAN 22" X 34" IT IS A REDUCED PRINT. SCALE ACCORDINGLY

NO.	DATE	REVISIONS/DESCRIPTION	APPR'D.

DESIGNED BY: RH
DRAWN BY: ZA
CHECKED BY: RH
DESIGN LEAD: VICTOR FRAZITA, P.E.
PROJECT MANAGER: FRANK VISINGARDI, JR., P.E.

ACCOUNTABLE MANAGER: STELLA UWAECHIE
PORTFOLIO MANAGER: ANDREW NG, P.E.
EXECUTIVE DIRECTOR: KENNETH E. MORIARTY, P.E.

"WARNING-IT IS A VIOLATION, OF THE NEW YORK STATE EDUCATION LAW, SECTION, 7209.2, FOR ANY PERSON, UNLESS (S)HE IS ACTING UNDER THE DIRECTION OF A LICENSED PROFESSIONAL ENGINEER, TO ALTER THIS DOCUMENT IN ANY WAY. IF ALTERED, THE ALTERING PERSON SHALL COMPLY WITH THE REQUIREMENTS OF NEW YORK EDUCATION, LAW, SECTION, 7209.2."

NEW YORK CITY ENVIRONMENTAL PROTECTION
BUREAU OF ENGINEERING DESIGN & CONSTRUCTION
96-05 HORACE HARDING EXPRESSWAY 5th FLOOR
CORONA, NEW YORK 11368
www.nyc.gov/dep

CAPITAL PROJECT WP-282
STATEN ISLAND, NY, OAKWOOD BEACH WRRF
CONTRACT OB-144A
SYMBOLS, ABBREVIATIONS AND GENERAL NOTES

DATE: OCTOBER 2026
SHEET NO: 6 OF 74
DRAWING NO. GC-001.00

Last Saved By: ZALBER Last Date Saved: 6/30/2026 11:13 AM Date & Time Plotted: 9/9/2026 10:38 AM
Paper Size Printed/Plotted: ANSI full bleed D (34.00 x 22.00 Inches) Plot Style Table: DEP_BEDC_22x34_ByWeight.ctb
Drawing File Name & Drive Location: C:\pwworking\east01\d4119079\GC-001.dwg Plot Scale: 1:1
All inquiries regarding this drawing(s) or project should be made to NYC Environmental Protection, Bureau of Engineering Design and Construction.

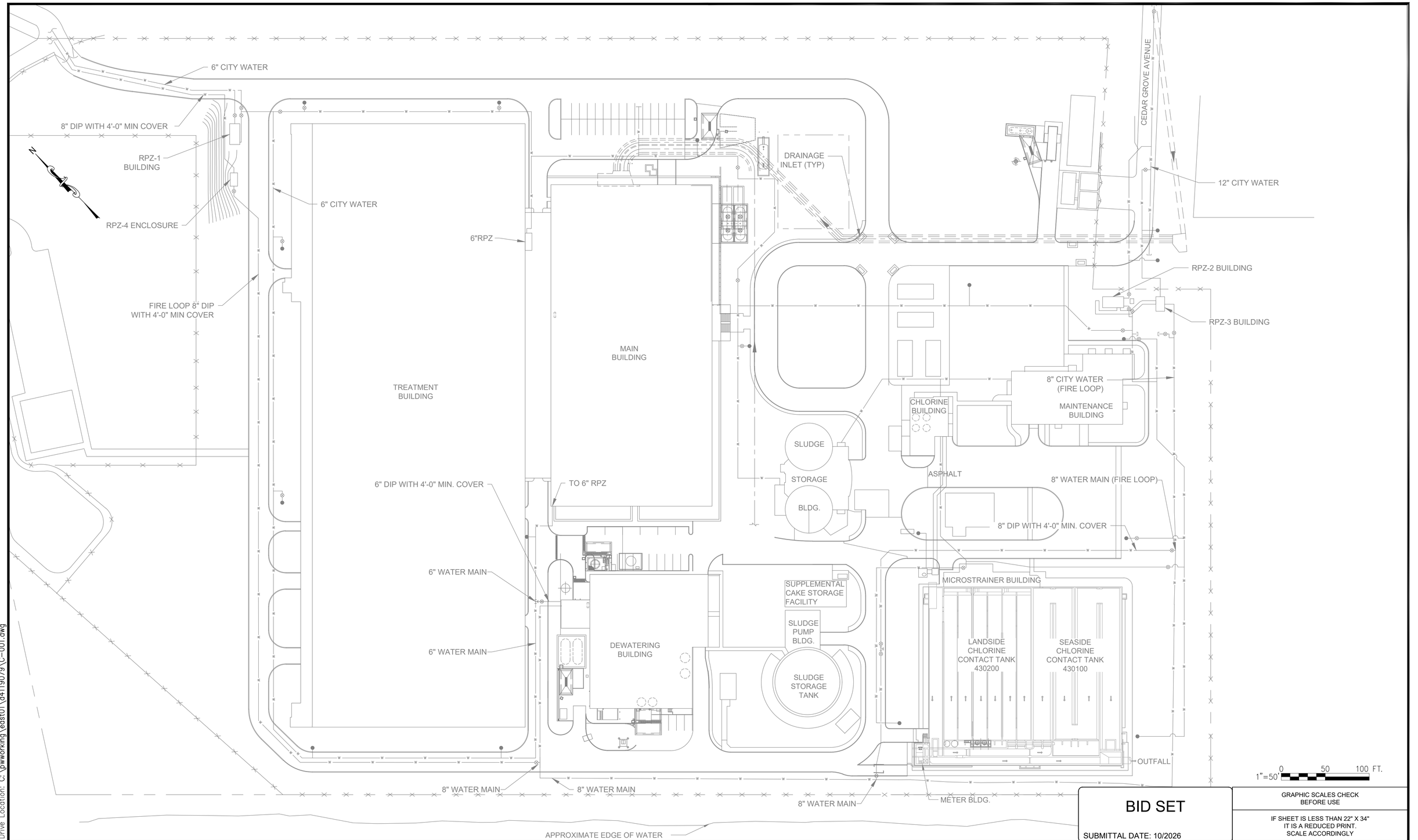

BID SET

SUBMITTAL DATE: 10/2026

GRAPHIC SCALES CHECK BEFORE USE

IF SHEET IS LESS THAN 22" X 34" IT IS A REDUCED PRINT. SCALE ACCORDINGLY

NO.	DATE	REVISIONS/DESCRIPTION	APPR'D.

DESIGNED BY: KH
DRAWN BY: ZA
CHECKED BY: RH
DESIGN LEAD: KAUO HSIEH, P.E.
PROJECT MANAGER: FRANK VISINGARDI, JR., P.E.

STATE OF NEW YORK FRANK VISINGARDI JR. 072716 LICENSED PROFESSIONAL ENGINEER

Environmental Protection

ACCOUNTABLE MANAGER: STELLA UWAECHIE
PORTFOLIO MANAGER: ANDREW NG, P.E.
EXECUTIVE DIRECTOR: KENNETH E. MORIARTY, P.E.

"WARNING-IT IS A VIOLATION, OF THE NEW YORK STATE EDUCATION LAW, SECTION, 7209.2, FOR ANY PERSON, UNLESS (S)HE IS ACTING UNDER THE DIRECTION OF A LICENSED PROFESSIONAL ENGINEER, TO ALTER THIS DOCUMENT IN ANY WAY. IF ALTERED, THE ALTERING PERSON SHALL COMPLY WITH THE REQUIREMENTS OF NEW YORK EDUCATION, LAW, SECTION, 7209.2."

NEW YORK CITY ENVIRONMENTAL PROTECTION
BUREAU OF ENGINEERING DESIGN & CONSTRUCTION
96-05 HORACE HARDING EXPRESSWAY 5th FLOOR
CORONA, NEW YORK 11368
www.nyc.gov/dep

CAPITAL PROJECT WP-282
STATEN ISLAND, NY, OAKWOOD BEACH WRRF
CONTRACT OB-144A

EXISTING SITE PLAN

DATE: OCTOBER 2026
SHEET NO: 7 OF 74
DRAWING NO. C-001.00

Last Saved By:ZALBER Last Date Saved:9/9/2026 9:54 AM Date & Time Plotted: 9/9/2026 9:54 AM
Paper Size Printed/Plotted: ANSI full bleed D (34.00 x 22.00 Inches) Plot Scale:0.997129 Plot Style Table: DEP_BEDC_22x34_ByWeight.ctb
Drawing File Name & Drive Location: C:\pwworking\east01\d4119079\C-001.dwg

All inquiries regarding this drawing(s) or project should be made to NYC Environmental Protection, Bureau of Engineering Design and Construction.

GENERAL NOTES:

1. CONTRACTOR TO COORDINATE STOCKPILE LOCATION WITH DEP PRIOR TO MOBILIZATION.

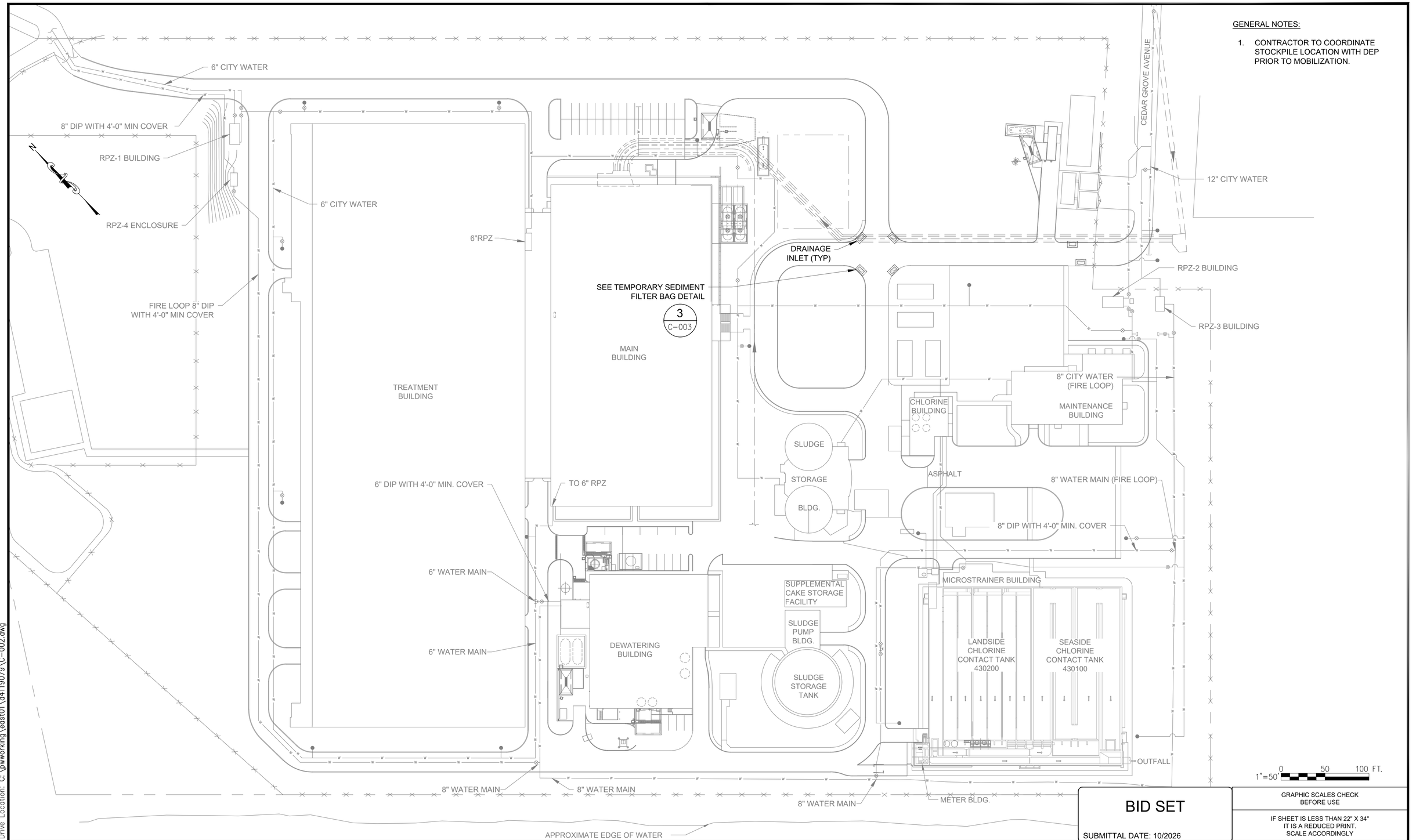

1"=50' 0 50 100 FT.

BID SET

SUBMITTAL DATE: 10/2026

GRAPHIC SCALES CHECK BEFORE USE

IF SHEET IS LESS THAN 22" X 34" IT IS A REDUCED PRINT. SCALE ACCORDINGLY

NO.	DATE	REVISIONS/DESCRIPTION	APPR'D.

DESIGNED BY: KH
DRAWN BY: ZA
CHECKED BY: RH
DESIGN LEAD: KAUO HSIEH, P.E.
PROJECT MANAGER: FRANK VISINGARDI, JR., P.E.

STATE OF NEW YORK FRANK VISINGARDI JR. 072716 LICENSED PROFESSIONAL ENGINEER

Environmental Protection

ACCOUNTABLE MANAGER: STELLA UWAECHIE
PORTFOLIO MANAGER: ANDREW NG, P.E.
EXECUTIVE DIRECTOR: KENNETH E. MORIARTY, P.E.

"WARNING-IT IS A VIOLATION, OF THE NEW YORK STATE EDUCATION LAW, SECTION, 7209.2, FOR ANY PERSON, UNLESS (S)HE IS ACTING UNDER THE DIRECTION OF A LICENSED PROFESSIONAL ENGINEER, TO ALTER THIS DOCUMENT IN ANY WAY. IF ALTERED, THE ALTERING PERSON SHALL COMPLY WITH THE REQUIREMENTS OF NEW YORK EDUCATION, LAW, SECTION, 7209.2."

NEW YORK CITY ENVIRONMENTAL PROTECTION
BUREAU OF ENGINEERING DESIGN & CONSTRUCTION
96-05 HORACE HARDING EXPRESSWAY 5th FLOOR
CORONA, NEW YORK 11368
www.nyc.gov/dep

CAPITAL PROJECT WP-282
STATEN ISLAND, NY, OAKWOOD BEACH WRRF
CONTRACT OB-144A

SOIL EROSION AND SEDIMENT CONTROL PLAN

DATE: OCTOBER 2026
SHEET NO: 8 OF 74
DRAWING NO. C-002.00

Last Saved By:ZALBER Last Date Saved:9/9/2026 9:56 AM Date & Time Plotted: 9/9/2026 9:56 AM
Paper Size Printed/Plotted: ANSI full bleed D (34.00 x 22.00 Inches) Plot Scale:0.997129 Plot Style Table: DEP_BEDC_22x34_ByWeight.ctb
Drawing File Name & Drive Location: C:\pwworking\east01\d4119079\C-002.dwg

All inquiries regarding this drawing(s) or project should be made to NYC Environmental Protection, Bureau of Engineering Design and Construction.

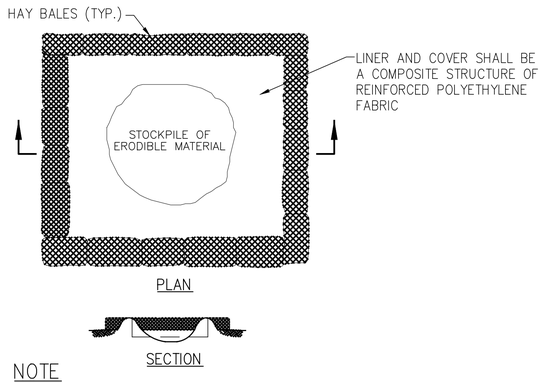

NOTE

STOCKPILES SHALL BE COVERED DURING NON-WORKING HOURS AND DURING PERIODS OF NO CONSTRUCTION ACTIVITY.

1 / - SEDIMENT CONTROL DETAIL FOR STOCKPILING OF ERODIBLE MATERIAL

NOT TO SCALE

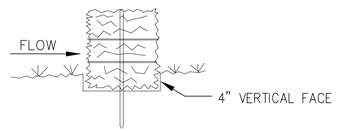

BEDDING DETAIL

NOT TO SCALE

DRAINAGE AREA NO MORE THAN 1/4 ACRE PER 100 FEET OF STRAW BALE DIKE FOR SLOPES LESS THAN 25%.

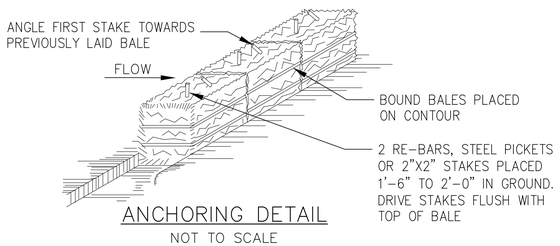

ANCHORING DETAIL

NOT TO SCALE

NOTES

1. BALES SHALL BE PLACED AT THE TOE OF A SLOPE OR ON THE CONTOUR AND IN A ROW WITH ENDS TIGHTLY ABUTTING THE ADJACENT BALES.
2. EACH BALE SHALL BE EMBEDDED IN THE SOIL A MINIMUM OF (4) INCHES, AND PLACED SO THE BINDINGS ARE HORIZONTAL.
3. BALES SHALL BE SECURELY ANCHORED IN PLACE BY EITHER TWO STAKES OR RE-BARS DRIVEN THROUGH THE BALE. THE FIRST STAKE IN EACH BALE SHALL BE DRIVEN TOWARD THE PREVIOUSLY LAID BALE AT AN ANGLE TO FORCE THE BALES TOGETHER. STAKES SHALL BE DRIVEN FLUSH WITH THE BALE.
4. INSPECTION SHALL BE FREQUENT AND REPAIR REPLACEMENT SHALL BE MADE PROMPTLY AS NEEDED.
5. BALES SHALL BE REMOVED WHEN THEY HAVE SERVED THEIR USEFUL LIFE SO AS NOT TO BLOCK OR IMPEDE STORM FLOW OR DRAINAGE.

2 / - STRAW BALE DIKE DETAIL

NOT TO SCALE

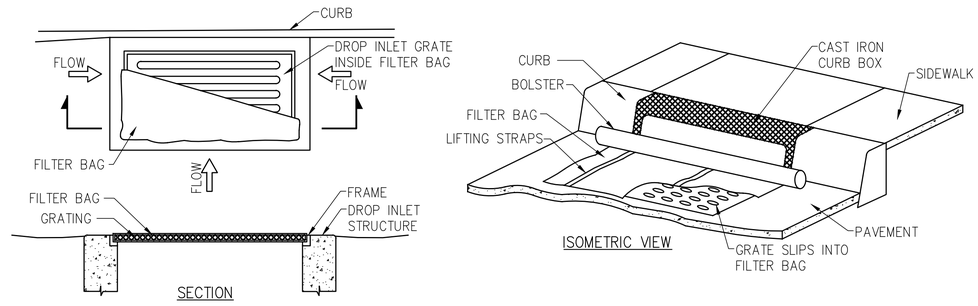

3 / C-002 TEMPORARY SEDIMENT FILTER BAG FOR DRAINAGE STRUCTURES DETAIL

NOT TO SCALE

BID SET

SUBMITTAL DATE: 10/2026

GRAPHIC SCALES CHECK BEFORE USE

IF SHEET IS LESS THAN 22" X 34" IT IS A REDUCED PRINT. SCALE ACCORDINGLY

NO.	DATE	REVISIONS/DESCRIPTION	APPR'D.

DESIGNED BY: KH
DRAWN BY: ZA
CHECKED BY: RH
DESIGN LEAD: KAUO HSIEH, P.E.
PROJECT MANAGER: FRANK VISINGARDI, JR., P.E.

ACCOUNTABLE MANAGER: STELLA UWAECHIE
PORTFOLIO MANAGER: ANDREW NG, P.E.
EXECUTIVE DIRECTOR: KENNETH E. MORIARTY, P.E.

"WARNING-IT IS A VIOLATION, OF THE NEW YORK STATE EDUCATION LAW, SECTION, 7209.2, FOR ANY PERSON, UNLESS (S)HE IS ACTING UNDER THE DIRECTION OF A LICENSED PROFESSIONAL ENGINEER, TO ALTER THIS DOCUMENT IN ANY WAY. IF ALTERED, THE ALTERING PERSON SHALL COMPLY WITH THE REQUIREMENTS OF NEW YORK EDUCATION, LAW, SECTION, 7209.2."

NEW YORK CITY ENVIRONMENTAL PROTECTION
BUREAU OF ENGINEERING DESIGN & CONSTRUCTION
96-05 HORACE HARDING EXPRESSWAY 5th FLOOR
CORONA, NEW YORK 11368
www.nyc.gov/dep

CAPITAL PROJECT WP-282
STATEN ISLAND, NY, OAKWOOD BEACH WRRF
CONTRACT OB-144A

SOIL EROSION AND SEDIMENT CONTROL DETAILS

DATE: OCTOBER 2026
SHEET NO: 9 OF 74
DRAWING NO. C-003.00

Last Saved By:ZALBER Last Date Saved:6/30/2026 10:48 AM Date & Time Plotted: 9/9/2026 10:26 AM
Paper Size Printed/Plotted: ANSI full bleed D (34.00 x 22.00 Inches) Plot Scale:0.997129 Plot Style Table: DEP_BEDC_22x34_ByWeight.ctb
Drawing File Name & Drive Location: C:\pwworking\east01\d4119079\C-003.dwg

All inquiries regarding this drawing(s) or project should be made to NYC Environmental Protection, Bureau of Engineering Design and Construction.

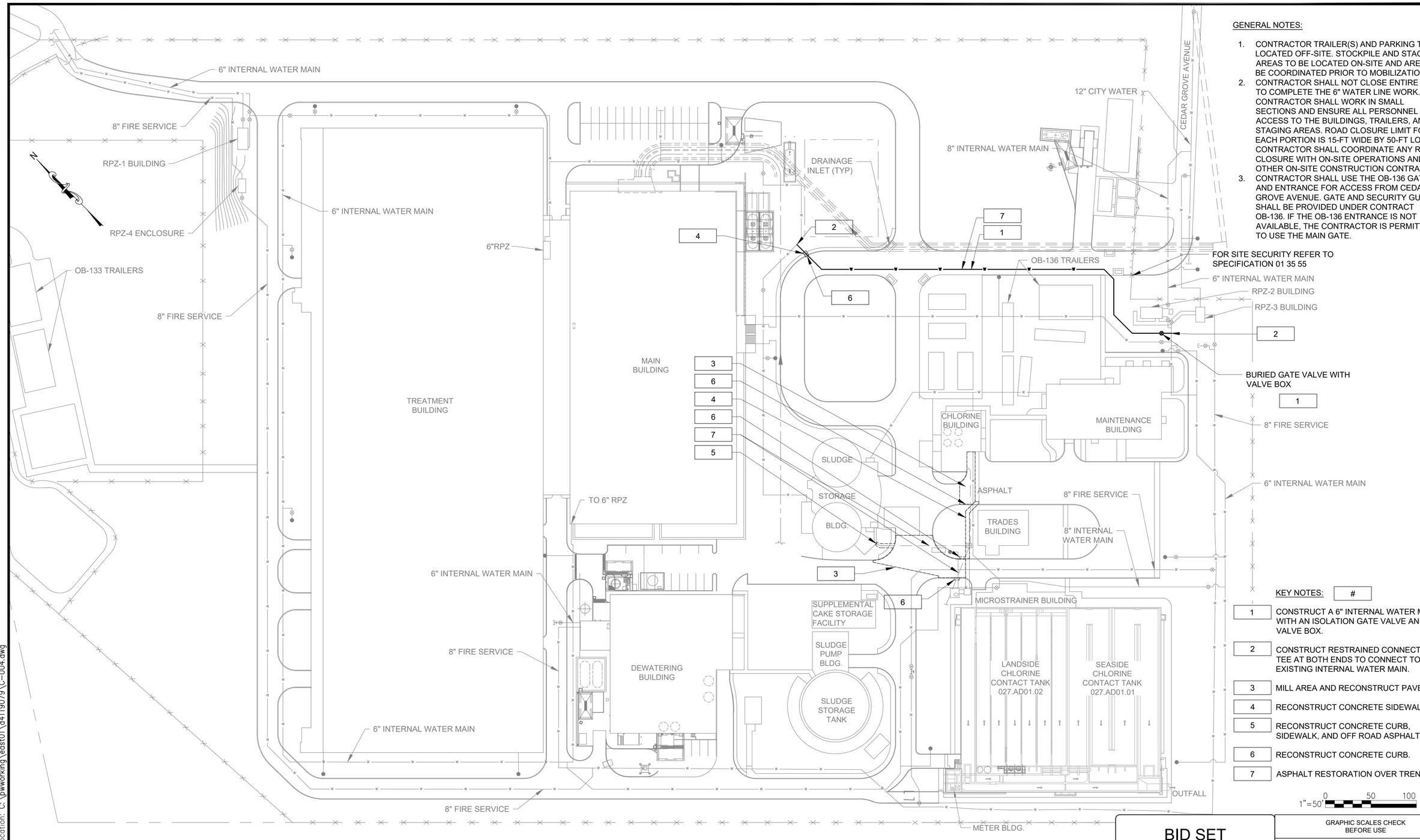

GENERAL NOTES:

1. CONTRACTOR TRAILER(S) AND PARKING TO BE LOCATED OFF-SITE. STOCKPILE AND STAGING AREAS TO BE LOCATED ON-SITE AND ARE TO BE COORDINATED PRIOR TO MOBILIZATION.
2. CONTRACTOR SHALL NOT CLOSE ENTIRE ROAD TO COMPLETE THE 6" WATER LINE WORK. CONTRACTOR SHALL WORK IN SMALL SECTIONS AND ENSURE ALL PERSONNEL HAVE ACCESS TO THE BUILDINGS, TRAILERS, AND STAGING AREAS. ROAD CLOSURE LIMIT FOR EACH PORTION IS 15-FT WIDE BY 50-FT LONG. CONTRACTOR SHALL COORDINATE ANY ROAD CLOSURE WITH ON-SITE OPERATIONS AND OTHER ON-SITE CONSTRUCTION CONTRACTS.
3. CONTRACTOR SHALL USE THE OB-136 GATE AND ENTRANCE FOR ACCESS FROM CEDAR GROVE AVENUE. GATE AND SECURITY GUARD SHALL BE PROVIDED UNDER CONTRACT OB-136. IF THE OB-136 ENTRANCE IS NOT AVAILABLE, THE CONTRACTOR IS PERMITTED TO USE THE MAIN GATE.

KEY NOTES: #

1	CONSTRUCT A 6" INTERNAL WATER MAIN WITH AN ISOLATION GATE VALVE AND VALVE BOX.
2	CONSTRUCT RESTRAINED CONNECTION TEE AT BOTH ENDS TO CONNECT TO EXISTING INTERNAL WATER MAIN.
3	MILL AREA AND RECONSTRUCT PAVEMENT.
4	RECONSTRUCT CONCRETE SIDEWALK.
5	RECONSTRUCT CONCRETE CURB, SIDEWALK, AND OFF ROAD ASPHALT AREA.
6	RECONSTRUCT CONCRETE CURB.
7	ASPHALT RESTORATION OVER TRENCH.

1"=50' 0 50 100 FT.

BID SET

SUBMITTAL DATE: 10/2026

GRAPHIC SCALES CHECK BEFORE USE

IF SHEET IS LESS THAN 22" X 34" IT IS A REDUCED PRINT. SCALE ACCORDINGLY

NO.	DATE	REVISIONS/DESCRIPTION	APPR'D.

DESIGNED BY: KH
DRAWN BY: ZA
CHECKED BY: RH
DESIGN LEAD: VICTOR FRAZITA, P.E.
PROJECT MANAGER: FRANK VISINGARDI, JR., P.E.

STATE OF NEW YORK FRANK VISINGARDI JR. 072716 LICENSED PROFESSIONAL ENGINEER

Environmental Protection

ACCOUNTABLE MANAGER: STELLA UWAECHIE
PORTFOLIO MANAGER: ANDREW NG, P.E.
EXECUTIVE DIRECTOR: KENNETH E. MORIARTY, P.E.

"WARNING-IT IS A VIOLATION, OF THE NEW YORK STATE EDUCATION LAW, SECTION, 7209.2, FOR ANY PERSON, UNLESS (S)HE IS ACTING UNDER THE DIRECTION OF A LICENSED PROFESSIONAL ENGINEER, TO ALTER THIS DOCUMENT IN ANY WAY. IF ALTERED, THE ALTERING PERSON SHALL COMPLY WITH THE REQUIREMENTS OF NEW YORK EDUCATION, LAW, SECTION, 7209.2."

NEW YORK CITY ENVIRONMENTAL PROTECTION
BUREAU OF ENGINEERING DESIGN & CONSTRUCTION
96-05 HORACE HARDING EXPRESSWAY 5th FLOOR
CORONA, NEW YORK 11368
www.nyc.gov/dep

CAPITAL PROJECT WP-282
STATEN ISLAND, NY, OAKWOOD BEACH WRRF
CONTRACT OB-144A

SITE PLAN AND YARD PIPING MODIFICATIONS

DATE: OCTOBER 2026
SHEET NO: 10 OF 74
DRAWING NO. C-004.00

Last Saved By:ZALBER Last Date Saved:9/30/2026 10:28 AM Date & Time Plotted: 9/30/2026 10:28 AM
Paper Size Printed/Plotted: ANSI full bleed D (34.00 x 22.00 Inches) Plot Scale:0.997129 Plot Style Table: DEP_BEDC_22x34_ByWeight.ctb
Drawing File Name & Drive Location: C:\pwworking\east01\d4119079\C-004.dwg

All inquiries regarding this drawing(s) or project should be made to NYC Environmental Protection, Bureau of Engineering Design and Construction.

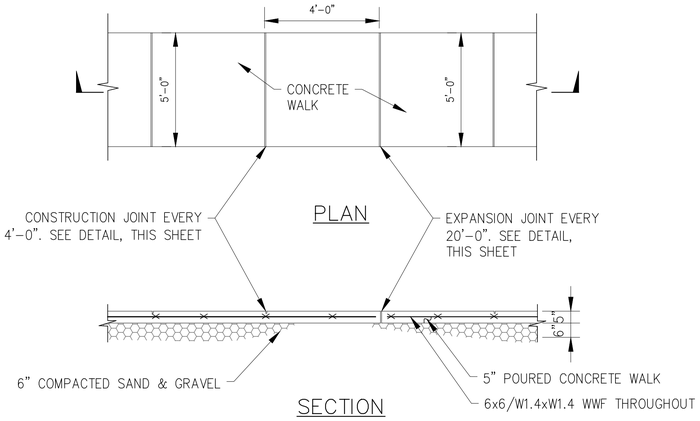

1 / – CONCRETE SIDEWALK DETAIL

NTS

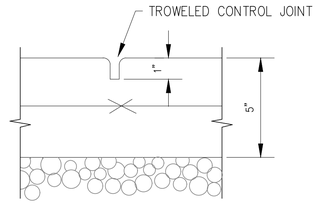

1A / – CONSTRUCTION CONTROL JOINT DETAIL

NTS

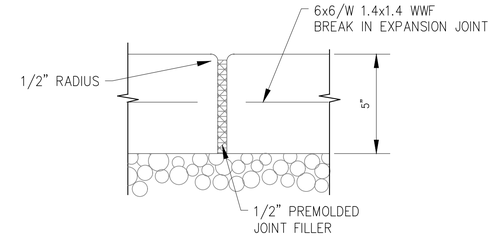

1B / – EXPANSION JOINT DETAIL

NTS

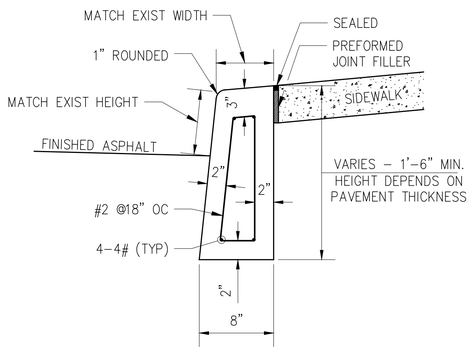

2 / C-004 CONCRETE CURB DETAIL

NTS

BID SET

SUBMITTAL DATE: 10/2026

GRAPHIC SCALES CHECK BEFORE USE

IF SHEET IS LESS THAN 22" X 34" IT IS A REDUCED PRINT. SCALE ACCORDINGLY

NO.	DATE	REVISIONS/DESCRIPTION	APPR'D.

DESIGNED BY: VF
DRAWN BY: ZA
CHECKED BY: RH
DESIGN LEAD: VICTOR FRAZITA, P.E.
PROJECT MANAGER: FRANK VISINGARDI, JR., P.E.

STATE OF NEW YORK FRANK VISINGARDI JR. 072716 LICENSED PROFESSIONAL ENGINEER

Environmental Protection

ACCOUNTABLE MANAGER: STELLA UWAECHIE
PORTFOLIO MANAGER: ANDREW NG, P.E.
EXECUTIVE DIRECTOR: KENNETH E. MORIARTY, P.E.

"WARNING-IT IS A VIOLATION, OF THE NEW YORK STATE EDUCATION LAW, SECTION, 7209.2, FOR ANY PERSON, UNLESS (S)HE IS ACTING UNDER THE DIRECTION OF A LICENSED PROFESSIONAL ENGINEER, TO ALTER THIS DOCUMENT IN ANY WAY. IF ALTERED, THE ALTERING PERSON SHALL COMPLY WITH THE REQUIREMENTS OF NEW YORK EDUCATION, LAW, SECTION, 7209.2."

NEW YORK CITY ENVIRONMENTAL PROTECTION
BUREAU OF ENGINEERING DESIGN & CONSTRUCTION
96-05 HORACE HARDING EXPRESSWAY 5th FLOOR
CORONA, NEW YORK 11368
www.nyc.gov/dep

CAPITAL PROJECT WP-282
STATEN ISLAND, NY, OAKWOOD BEACH WRRF
CONTRACT OB-144A
SITE DETAILS
SHEET 1 OF 3

DATE: OCTOBER 2026
SHEET NO: 11 OF 74
DRAWING NO. C-005.00

Last Saved By: ZALBER Last Date Saved: 6/30/2026 10:55 AM Date & Time Plotted: 9/9/2026 10:36 AM
Paper Size Printed/Plotted: ANSI full bleed D (34.00 x 22.00 Inches) Plot Scale: 1:1 Plot Style Table: DEP_BEDC_22x34_ByWeight.ctb
Drawing File Name & Drive Location: C:\pwworking\east01\d4119079\C-005.dwg

All inquiries regarding this drawing(s) or project should be made to NYC Environmental Protection, Bureau of Engineering Design and Construction.

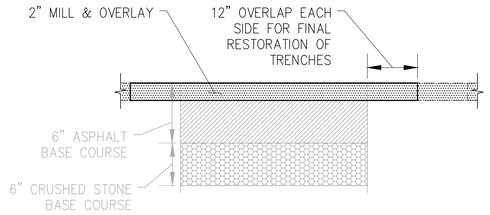

1 – GENERAL FINAL PAVEMENT RESTORATION DETAIL

N.T.S.

NOTES:

1. FINAL PAVEMENT RESTORATION TO CONSIST OF 2" MILL AND OVERLAY, AND SHALL BE IN ACCORDANCE WITH NYCDOT STANDARD DETAIL DRAWING #MS-1003.

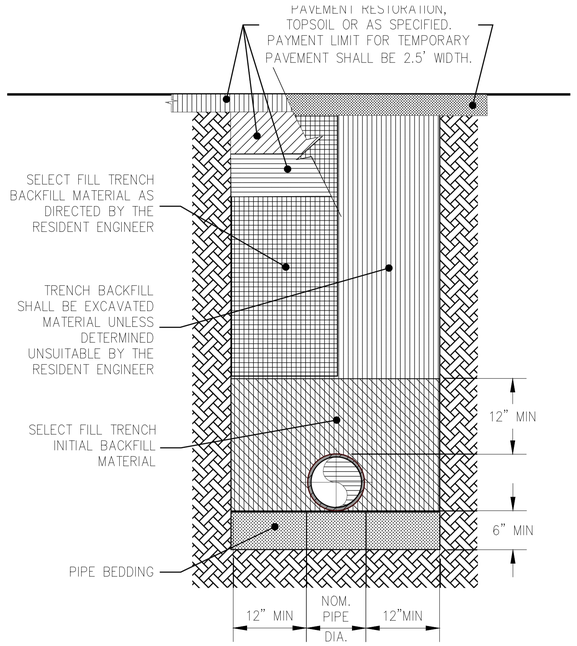

2 – PIPE TRENCH DETAIL NORMAL SOIL CONDITIONS

N.T.S.

NOTES:

1. MATERIALS
   - 1.1. IN ACCORDANCE WITH THE REQUIREMENTS OF SPECIFICATION SECTION 31 23 23 – FILL, SUBSECTION 2.02.A, "BACKFILL SHALL BE COMPOSED OF SUITABLE MATERIALS AS DEFINED IN THIS SECTION:
     - 1.1.1. ON-SITE MATERIALS: MATERIAL TO BE EXCAVATED AND PROPOSED FOR REUSE AS FILL UNDER PRE-DETERMINED BENEFICIAL USE MUST MEET THE REQUIREMENTS OF SPECIFICATION SECTION 02 24 20 – SOIL SAMPLING AND ANALYSIS SUBSECTION 1.04.A.10.G.
   - 1.2. SELECT FILL SHALL BE IN ACCORDANCE WITH THE REQUIREMENTS OF SPECIFICATION SECTION 31 23 23 SUBSECTION C.
   - 1.3. PIPE BEDDING SHALL BE IN ACCORDANCE WITH THE REQUIREMENTS OF SPECIFICATION SECTION 31 23 23 SUBSECTION E.
2. TRENCH INITIAL BACKFILL
   - 2.1. INITIAL TRENCH BACKFILL SHALL BE IN ACCORDANCE WITH THE REQUIREMENTS OF SPECIFICATION SECTION 31 23 23 – FILL, SUBSECTION 3.02.F.1 WHICH STATES "PLACE SELECT FILL BY HAND FOR INITIAL PIPE BACKFILL FROM TOP OF BEDDING TO 1 FOOT OVER TOP OF PIPES IN UNIFORM LAYERS NOT GREATER THAN 6 INCHES IN LOOSE THICKNESS. TAMP UNDER PIPE HAUNCHES AND THOROUGHLY COMPACT IN PLACE THE SELECT FILL WITH SUITABLE MECHANICAL OR PNEUMATIC TOOLS TO NOT LESS THAN 95% MAXIMUM DRY DENSITY."
3. TRENCH BACKFILL EXCEPT UNDER PAVEMENTS, WALKWAYS, RAILROAD TRACKS, AND STREET HIGHWAY APPURTENANCES:
   - 3.1. TRENCH BACKFILL EXCEPT IN AREAS AS NOTED ABOVE SHALL BE IN ACCORDANCE WITH THE REQUIREMENTS OF SPECIFICATION SECTION 31 23 23 – FILL, SUBSECTION 3.02.H.3, WHICH STATES "TRENCH BACKFILL SHALL BE PLACED IN MAXIMUM LIFTS OF 9" AND COMPACTED TO A MINIMUM COMPACTION OF 90% MAXIMUM DRY DENSITY."
4. TRENCH BACKFILL UNDER TRAFFIC AREAS AND UNDER UTILITIES
   - 4.1. IN ACCORDANCE WITH THE REQUIREMENTS OF SPECIFICATION SECTION 31 23 23 – FILL, SUBSECTION 3.02.H.4, "TRENCH BACKFILL UNDER TRAFFIC AREAS AND UNDER UTILITIES SHALL BE PLACED IN MAXIMUM LIFTS OF 9". EACH LIFT SHALL BE COMPACTED TO A MINIMUM COMPACTION OF 95% MAXIMUM DRY DENSITY."

BID SET

SUBMITTAL DATE: 10/2026

GRAPHIC SCALES CHECK BEFORE USE

IF SHEET IS LESS THAN 22" X 34" IT IS A REDUCED PRINT. SCALE ACCORDINGLY

NO.	DATE	REVISIONS/DESCRIPTION	APPR'D.

DESIGNED BY: VF
DRAWN BY: ZA
CHECKED BY: RH
DESIGN LEAD: VICTOR FRAZITA, P.E.
PROJECT MANAGER: FRANK VISINGARDI, JR., P.E.

STATE OF NEW YORK FRANK VISINGARDI JR. 072716 LICENSED PROFESSIONAL ENGINEER

Environmental Protection

ACCOUNTABLE MANAGER: STELLA UWAECHIE
PORTFOLIO MANAGER: ANDREW NG, P.E.
EXECUTIVE DIRECTOR: KENNETH E. MORIARTY, P.E.

"WARNING-IT IS A VIOLATION, OF THE NEW YORK STATE EDUCATION LAW, SECTION, 7209.2, FOR ANY PERSON, UNLESS (S)HE IS ACTING UNDER THE DIRECTION OF A LICENSED PROFESSIONAL ENGINEER, TO ALTER THIS DOCUMENT IN ANY WAY. IF ALTERED, THE ALTERING PERSON SHALL COMPLY WITH THE REQUIREMENTS OF NEW YORK EDUCATION, LAW, SECTION, 7209.2."

NEW YORK CITY ENVIRONMENTAL PROTECTION
BUREAU OF ENGINEERING DESIGN & CONSTRUCTION
96-05 HORACE HARDING EXPRESSWAY 5th FLOOR
CORONA, NEW YORK 11368
www.nyc.gov/dep

CAPITAL PROJECT WP-282
STATEN ISLAND, NY, OAKWOOD BEACH WRRF
CONTRACT OB-144A
SITE DETAILS
SHEET 2 OF 3

DATE: OCTOBER 2026
SHEET NO: 12 OF 74
DRAWING NO. C-006.00

Last Saved By: ZALBER Last Date Saved: 6/30/2026 10:55 AM Date & Time Plotted: 9/9/2026 10:36 AM
Paper Size Printed/Plotted: ANSI full bleed D (34.00 x 22.00 Inches) Plot Scale: 1:1 Plot Style Table: DEP_BEDC_22x34_ByWeight.ctb
Drawing File Name & Drive Location: C:\pwworking\east01\d4119079\C-005.dwg

All inquiries regarding this drawing(s) or project should be made to NYC Environmental Protection, Bureau of Engineering Design and Construction.

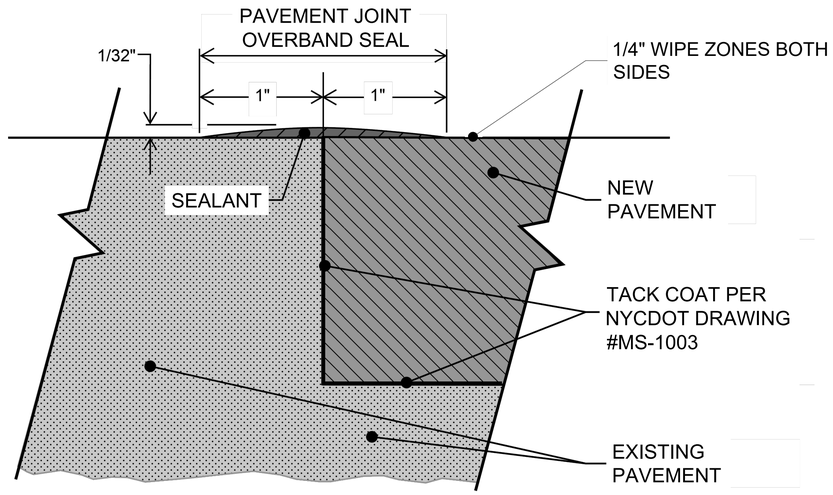

CROSS SECTION CONFIGURATION OF OVERBAND SEALING OF JOINTS IN BITUMINOUS PAVEMENTS EXISTING PAVEMENT TO NEW PAVEMENT JOINT

3 / –

SCALE: NONE

CONSTRUCTION DETAILS

JOINT PREPARATION

PRIOR TO THE COMMENCEMENT OF JOINT SEALING, THE DEBRIS ON THE PAVEMENT SURFACE SHALL BE REMOVED BY SWEEPING OR BLOWING WITH COMPRESSED AIR, IN A MANNER NOT HAZARDOUS TO THE MOTORING PUBLIC.

JOINT SEALING

THE ENTIRE LENGTH OF THE JOINT BETWEEN THE EXISTING AND NEW PAVEMENT SHALL BE SEALED.

THE SEALANT SHALL NOT BE INCORPORATED WHEN THE PAVEMENT IS WET OR DIRTY OR THE AMBIENT OR PAVEMENT TEMPERATURE FALLS BELOW 4°C (39°F) OR ABOVE 29°C (84°F). IMMEDIATELY PRIOR TO THE PLACEMENT OF THE SEALANT, THE SURFACE AREAS OF THE PAVEMENT 50 MM (2 IN) TO EITHER SIDE OF THEIR SIDEWALL SHALL BE CLEANED AND DRIED WITH HOT COMPRESSED AIR FROM THE HOT AIR LANCE. THIS TREATMENT SHALL CONTINUE UNTIL THE AFFECTED AREAS ARE DARKENED SLIGHTLY.

THE SEALANT SHALL BE PLACED WITHIN TWO MINUTES FROM THE TIME THE HOT AIR LANCE HAS PASSED OVER THE JOINT AND ITS ADJACENT PAVEMENT SIDE SURFACES. (THIS TIME INTERVAL IS CRITICAL; THE SHORTER THE BETTER.)

AT NO TIME SHALL THE SEALANT REMAIN IN THE DISCHARGE HOSES AND APPLICATOR WAND IN AN UNCIRCULATED CONDITION FOR A PERIOD OF TIME EXCEEDING 30 SECONDS. THE APPLICATOR WAND SHALL BE RETURNED TO THE KETTLE HOLDING TANK AND THE MATERIAL RECIRCULATED IMMEDIATELY UPON THE COMPLETION OF EACH CRACK SEALING.

THE SEALANT TEMPERATURE AS DISCHARGED INTO THE CRACK RESERVOIR SHALL BE ACCORDING TO THE MANUFACTURER'S RECOMMENDED APPLICATION TEMPERATURE ± 5°C. (41°F). NO CRACK SEALING SHALL COMMENCE UNTIL IT HAS BEEN DETERMINED BY THE ENGINEER THAT A SPECIFIED POURING TEMPERATURE HAS BEEN ACHIEVED. USE OF THE HANDHELD DIGITAL TEMPERATURE GAUGE IS IMPORTANT IN THIS (SEE EQUIPMENT REQUIREMENTS). DURING INCORPORATION ON SEALANT INTO THE CRACK RESERVOIR, A LEVELING OF THE SEALANT SHALL BE ACHIEVED THROUGH THE USE OF A BANDING WAND TIP ATTACHMENT. A SEALANT OVERBAND 50 MM (2 IN) WIDE AND A MAXIMUM OF 0.8 MM (1/32 IN) CONVEX TO THE PAVEMENT SHALL BE ACHIEVED (SEE DETAIL AT RIGHT FOR A CROSS-SECTIONAL VIEW OF THE DESIGN CONFIGURATION).

THE TEMPERATURE OF MATERIAL IN THE TANK, AS WELL AS AT THE POINT OF DISCHARGE, SHALL BE RECORDED AT ONE-HOUR INTERVALS AND KEPT AVAILABLE FOR INSPECTION BY THE ENGINEER.

THE SEALANT SHALL BE TACK-FREE WITHIN 15 MINUTES WITHOUT THE APPLICATION OF BARRIER SPRAY.

AT THE END OF THE WORKDAY AND AT SUCH TIMES AS REQUIRED BY THE ENGINEER, THE CONTRACTOR SHALL CLEAN AND REMOVE ALL DEBRIS GENERATED IN THE AREA OF WORK BY HIS OPERATIONS.

DESCRIPTION OF WORK

THE WORK SHALL CONSIST OF CLEANING AND SEALING THE JOINT BETWEEN NEW AND EXISTING BITUMINOUS PAVEMENT.

MATERIALS

THE SEALANT SHALL BE A POLYMER/POLYESTER FIBER MODIFIED ASPHALT SEALANT THAT IS A HOMOGENEOUS BLEND OF HIGH-QUALITY POLYMER MODIFIED ASPHALT AND POLYESTER FIBER SUPPLIED IN SOLID FORM. FIELD MIXED AC AND FIBERS WILL NOT BE ACCEPTED. THE MATERIAL SHALL COME PACKAGED IN SEALED CARTONS OF UNIFORM WEIGHT AND PALLETIZED ON PALLETS OF UNIFORM WEIGHT. EACH CARTON SHALL BE CLEARLY MARKED WITH THE NAME AND ADDRESS OF THE MANUFACTURER, THE TRADE NAME OF THE MATERIAL, SPECIFICATION DESIGNATION, THE MANUFACTURER'S BATCH AND LOT NUMBER, RECOMMENDED POURING (APPLICATION) TEMPERATURE, SAFE HEATING TEMPERATURE (THE HIGHEST TEMPERATURE TO WHICH THE MATERIAL CAN BE HEATED AND STILL CONFORM TO THE REQUIREMENTS OF THE SPECIFICATION) AND APPLICATION INSTRUCTIONS.

THE MATERIALS SHALL CONFORM TO THE FOLLOWING REQUIREMENTS:

FIBER REQUIREMENTS			
TYPE	POLYESTER		
DENIER	3 TO 5		
LENGTH	6.5 mm ± .75 mm		
SPECIFIC GRAVITY	1.34 – 1.40		
MELT TEMPERATURE	247°C TO 255°C (478°F – 490°F)		
TENSILE STRENGTH	53,708 – 60,632 N/cm² (78,000 – 88,000 psi)		
ELONGATION TO BREAK	35 – 38%		
MODIFIED POLYMER ASPHALT PROPERTIES			
PENETRATION	25°C	ASTM D5	100 MINIMUM
SOFTENING POINT	3 TO 5	ASTM D36	50 cm MINIMUM
DUCTILITY	25°C	ASTM D5	100 cm MINIMUM
DUCTILITY	4°C	ASTM D92	50 cm MINIMUM
FLASH POINT		ASTM D92	224°C MINIMUM
COMBINED MATERIAL PROPERTIES			
RECOMMENDED APPLICATION TEMPERATURE			177°C (350°F)
SAFE HEATING TEMPERATURE			204°C (400°F)
SOFTENING POINT		ASTM D36	99°C MINIMUM
CONE PENETRATION	25°C	ASTM D5329	20 MAXIMUM
DUCTILITY	25°C	ASTM D113	10 cm/minute
FLEXIBILITY	25 mm @ –7°C	90° BEND IN 10 SEC	PASS
MINIMUM % FIBER	BY WEIGHT OF ASPHALT		5% ± ½%
UNIT WEIGHT AT 15°C			1.08 KG/L

NOTES:
1. SEALANT SHALL BE TACK FREE WITHIN 15 MINUTES OF APPLICATION WITHOUT USE OF BARRIER SPRAY COMMODITIES.
2. THE MATERIAL USED FOR TESTING SOFTENING POINT, PENETRATION, DUCTILITY AND FLEXIBILITY, SHALL BE HEATED TO THE SAFE HEATING TEMPERATURE AS SPECIFIED BY THE MANUFACTURER AND IN ACCORDANCE WITH ASTM D5329.

EQUIPMENT REQUIREMENTS

THE MELTING KETTLE SHALL BE DOUBLE JACKETED BOILER TYPE, EQUIPPED WITH BOTH AGITATION AND RE-CIRCULATION SYSTEMS CAPABLE OF MELTING AND APPLYING THE SEALANT THROUGH A PRESSURE-FED HOSE AND WAND. A 50 MM (2 IN) DIAMETER SHOE-TYPE (DISH-STYLE) WAND TIP SHALL BE USED TO INSURE UNIFORMITY IN OVERBAND APPLICATION OF POLYMER/POLYESTER FIBER MODIFIED SEALANT. THE MELTER APPLICATOR SHALL BE CAPABLE OF STARTING AT AMBIENT TEMPERATURE AND BRINGING THE SEALING MATERIAL UP TO APPLICATION TEMPERATURE IN ONE HOUR OR LESS, WHILE CONTINUOUSLY AGITATING AND RECIRCULATING THE SEALANT. THE MELTER SHALL BE EQUIPPED WITH AUTOMATIC THERMOSTATIC CONTROLS AND TEMPERATURE GAUGES TO MONITOR THE SEALANT TEMPERATURE IN THE APPLICATOR LINES AND TEMPERATURE OF HEAT TRANSFER OIL IN THE KETTLE JACKET.

THE AIR COMPRESSOR SHALL BE A MINIMUM 3.54M3/MINUTE (125 CFM) CAPABLE OF EMITTING AIR THROUGH THE NOZZLE WITHIN THE RANGE OF 520 KPA TO 1030 KPA (75 PSI –150 PSI). THE AIR COMPRESSOR SHALL BE EQUIPPED WITH TRAPS (DRYER-FILTERS) CAPABLE OF REMOVING MOISTURE AND OIL FROM THE BLAST AIR. THE HOT AIR LANCE SHALL BE USED AT ALL TIMES WHEN CRACK SEALING. THE LANCE SHALL OPERATE WITH PROPANE AND COMPRESSED AIR IN COMBINATION AND BE CAPABLE OF ACHIEVING A TEMPERATURE OF HEATED AIR AT THE EXIT ORIFICE OF 980°C (1800 °F) AND A DISCHARGE VELOCITY OF 900 M/S (2,950 FT/SEC).

BID SET

SUBMITTAL DATE: 10/2026

GRAPHIC SCALES CHECK BEFORE USE

IF SHEET IS LESS THAN 22" X 34" IT IS A REDUCED PRINT. SCALE ACCORDINGLY

NO.	DATE	REVISIONS/DESCRIPTION	APPR'D.

DESIGNED BY: VF
DRAWN BY: ZA
CHECKED BY: RH
DESIGN LEAD: VICTOR FRAZITA, P.E.
PROJECT MANAGER: FRANK VISINGARDI, JR., P.E.

STATE OF NEW YORK FRANK VISINGARDI 072716 LICENSED PROFESSIONAL ENGINEER

Environmental Protection

ACCOUNTABLE MANAGER: STELLA UWAECHIE
PORTFOLIO MANAGER: ANDREW NG, P.E.
EXECUTIVE DIRECTOR: KENNETH E. MORIARTY, P.E.

"WARNING-IT IS A VIOLATION, OF THE NEW YORK STATE EDUCATION LAW, SECTION, 7209.2, FOR ANY PERSON, UNLESS (S)HE IS ACTING UNDER THE DIRECTION OF A LICENSED PROFESSIONAL ENGINEER, TO ALTER THIS DOCUMENT IN ANY WAY. IF ALTERED, THE ALTERING PERSON SHALL COMPLY WITH THE REQUIREMENTS OF NEW YORK EDUCATION, LAW, SECTION, 7209.2."

NEW YORK CITY ENVIRONMENTAL PROTECTION
BUREAU OF ENGINEERING DESIGN & CONSTRUCTION
96-05 HORACE HARDING EXPRESSWAY 5th FLOOR
CORONA, NEW YORK 11368
www.nyc.gov/dep

CAPITAL PROJECT WP-282
STATEN ISLAND, NY, OAKWOOD BEACH WRRF
CONTRACT OB-144A
SITE DETAILS
SHEET 3 OF 3

DATE: OCTOBER 2026
SHEET NO: 13 OF 74
DRAWING NO. C-007.00

All inquiries regarding this drawing(s) or project should be made to NYC Environmental Protection, Bureau of Engineering Design and Construction.

Last Saved By:ZALBER Last Date Saved:6/30/2026 10:55 AM Date & Time Plotted: 9/9/2026 10:37 AM
Paper Size Printed/Plotted: ANSI full bleed D (34.00 x 22.00 Inches) Plot Scale:1:1 Plot Style Table: DEP_BEDC_22x34_ByWeight.ctb
Drawing File Name & Drive Location: C:\pwworking\east01\d4119079\C-005.dwg

GENERAL NOTES

GENERAL

G-1 THESE NOTES ARE GENERAL AND SUPPLEMENTAL TO THE SPECIFICATIONS. THESE NOTES APPLY TO THE ENTIRE PROJECT UNLESS MODIFIED OR NOTED OTHERWISE IN THE CONTRACT DOCUMENTS.

G-2 DESIGN WAS IN ACCORDANCE WITH AND CONSTRUCTION SHALL COMPLY WITH THE PROVISIONS OF THE NEW YORK CITY BUILDING CODE (NYCBC). THE DESIGN LOADS AND OTHER DESIGN VALUES GIVEN BELOW WERE USED FOR DESIGN OF STRUCTURES UNO ON THE DRAWINGS.

G-3 ALL DIMENSIONS INDICATED (*) ARE TO BE VERIFIED EITHER BY FIELD MEASUREMENTS FOR EXISTING STRUCTURES OR BY SHOP DRAWINGS FOR EQUIPMENT FURNISHED. STRUCTURAL DIMENSIONS NOT SHOWN BUT CONTROLLED BY OR RELATED TO EQUIPMENT SHALL BE VERIFIED BY THE CONTRACTOR WITH THE MANUFACTURER PRIOR TO CONSTRUCTION.

G-4 IF A CONFLICT IS FOUND BETWEEN DIFFERENT PORTIONS OF THE CONTRACT DOCUMENTS, THE CONTRACTOR SHALL NOTIFY THE ENGINEER IMMEDIATELY. CONTINUED CONSTRUCTION OF THE AREA IN CONFLICT SHALL BE AT THE CONTRACTOR'S OWN RISK UNTIL THE CONFLICT IS RESOLVED BY THE ENGINEER.

G-5 THE CONTRACTOR IS RESPONSIBLE FOR VERIFYING ALL EXISTING INFORMATION IN THE FIELD AS REQUIRED FOR NEW WORK.

STRUCTURAL METALS

S-1 DETAIL, FABRICATE, AND ERECT STRUCTURAL STEEL IN ACCORDANCE WITH AISC SPECIFICATION FOR STRUCTURAL STEEL BUILDINGS, ALLOWABLE STRESS DESIGN AND LRFD DESIGN (LRFD MANUAL OF STEEL CONSTRUCTION, CURRENT EDITION).

S-2 STEEL MATERIAL:
- A) STRUCTURAL TUBING, ASTM A 500, GRADE B
- B) STRUCTURAL PIPE, ASTM A 53, GRADE B
- C) PLATES AND ANGLES, ASTM A 36 UNO
- D) STRUCTURAL W SHAPES, ASTM A 992 (MIN YIELD STRENGTH OF 50 KSI).
- E) STRUCTURAL S, M, & H SHAPES ASTM A572 GRADE 50

S-3 PROVIDE MIN 3/4" DIAMETER ASTM A 325 HIGH STRENGTH BOLTS WITH FULLY TIGHTENED TYPE N CONNECTIONS FOR STRUCTURAL STEEL UNO.

S-4 PROVIDE TYPICAL STEEL BEAM CONNECTIONS FOR A CAPACITY NOT LESS THAN THE TOTAL UNIFORM LOAD CAPACITY TABULATED IN THE AISC TABLES FOR ALLOWABLE LOADS OF BEAMS UNLESS NOTED OTHERWISE.

S-5 CAST IN PLACE ANCHOR BOLTS FOR STRUCTURAL STEEL SHALL CONFORM TO ASTM A307 UNO.

S-6 DO NOT PAINT STEEL SURFACES WHICH ARE TO BE WELDED OR ARE TO BE ENCASED IN CONCRETE.

S-7 STAINLESS STEEL SHALL BE TYPE 316 FOR BOLTED CONSTRUCTIONS AND 316L FOR WELDED CONSTRUCTIONS.

S-8 ALL GROOVE AND BUTT WELDS SHALL BE FULL PENETRATION.

S-9 FILLET WELD SIZES SHALL BE THE MINIMUM SIZE REQUIRED BY AISC CODE FOR PLATE SIZES TO BE CONNECTED AND SHALL BE APPLIED TO THE ENTIRE JOINT CONTACT LENGTH, BUT NOT LESS THAN 3/16".

CONCRETE (EXCEPT PRECAST)

C-1 CONCRETE STRENGTH CLASSES (28-DAY COMPRESSIVE STRENGTH):
CLASS A (5000 PSI) STRUCTURES, REINFORCED DUCT BANKS, AND PIPE ENCASEMENT. FOR CONCRETE WALLS GREATER THAN 2 FEET THICK FOLLOW ACI RECOMMENDATIONS FOR MASS CONCRETE.
CLASS D (2500 PSI) SIDEWALKS, CURBS AND GUTTERS, CONCRETE FILL, THRUST BLOCKS, UNREINFORCED DUCT BANKS AND PIPE ENCASEMENT, FENCE POST EMBEDMENT.

C-2 REINFORCEMENT: ASTM A615, GRADE 60, OR ASTM A706, GRADE 60 WHERE REINFORCEMENT IS TO BE WELDED.

C-3 CONCRETE COVER FOR REINFORCING:
- A) SURFACES CAST AGAINST SUBGRADE 3" MIN
- B) FORMED SURFACES IN CONTACT WITH SOIL OR LIQUID 2" MIN
- C) SURFACES NOT IN CONTACT WITH WEATHER, SOIL, OR LIQUID 1 1/2" MIN

C-4 CONSTRUCTION JOINTS & CONTROL JOINTS SHALL BE LOCATED AS SHOWN ON THE DRAWINGS. WHERE NOT SHOWN, CONSTRUCTION JOINTS SHALL BE LOCATED AT NO MORE THAN 30 FEET ON CENTER. JOINT LOCATIONS SHALL BE AS APPROVED BY THE ENGINEER.

C-5 EQUIPMENT SUPPORTS, ANCHORAGES, OPENINGS, RECESSES AND REVEALS NOT SHOWN ON THE STRUCTURAL DRAWINGS BUT REQUIRED BY OTHER DISCIPLINES, SHALL BE PROVIDED FOR PRIOR TO PLACING CONCRETE.

C-6 SPLICES SHALL BE CLASS 'B' CONFORMING TO THE PROVISIONS OF ACI 318 UNLESS NOTED OTHERWISE.

C-7 AT ALL TYPICAL CURBS, EQUIPMENT PADS, AND PIPE SUPPORT PIERS, REINFORCING DOWELS SHOWN MAY BE REPLACED WITH MATCHING DOWELS SET IN EPOXY IN DRILLED HOLES AS SPECIFIED. DOWELS LOCATED CLOSER THAN 3" FROM ANY EDGE OF CONCRETE SHALL NOT BE REPLACED WITH DRILLED DOWELS.

C-8 DRILLED EPOXY DOWELS (WHERE DOWELS ARE SHOWN TO BE PLACED INTO HARDENED CONCRETE):
- A) THE HOLE DIAMETER SHALL BE NO LARGER THAN 1/8" GREATER THAN THE DIAMETER OF THE REINFORCING BAR AT THE DEFORMATIONS.
- B) THE DEPTH OF EMBEDMENT SHALL BE 12 BAR DIAMETERS, UNLESS SHOWN OTHERWISE.
- C) ADJUST THE DOWEL LOCATIONS AS NEEDED TO AVOID DRILLING THROUGH ANY REINFORCING BARS. IF THE DOWEL LOCATION NEEDS TO BE MODIFIED, CONTACT THE ENGINEER.

C-9 SLABS WITH SLOPING SURFACES SHALL HAVE THE INDICATED SLAB THICKNESS MAINTAINED AS THE MINIMUM. SLAB BOTTOMS CAN EITHER SLOPE WITH THE TOP SURFACE OR BE LEVEL. REINFORCEMENT IN SLABS WITH SLOPING SURFACES SHALL BE PLACED AT THE REQUIRED CLEARANCE FROM THE SLAB SURFACE.

CONCRETE (EXCEPT PRECAST) CONTN.

C-10 SLOPES SHOWN ON SLAB SURFACES BY FLOW ARROWS SHALL BE 1.0 PERCENT UNLESS NOTED OTHERWISE.

C-11 WHERE HORIZONTAL CONSTRUCTION JOINTS, LOCATED ABOVE THE FOUNDATION SLAB, EXTEND BEYOND WHERE NEEDED, THEY SHALL BE TERMINATED AT A VERTICAL CONSTRUCTION JOINT APPROVED BY THE ENGINEER.

C-12 DOWELS, ANCHOR BOLTS, PIPES, WATERSTOPS AND OTHER EMBEDDED ITEMS SHALL BE HELD SECURELY IN POSITION WHILE CONCRETE IS BEING PLACED.

C-13 CONDUITS AND OTHER SIMILAR ITEMS EMBEDDED IN OR PENETRATING THROUGH CONCRETE SHALL BE SPACED ON CENTER NOT LESS THAN 3 TIMES THEIR OUTSIDE DIMENSION, BUT NOT LESS THAN 2 1/2" CLEAR IN CLASS 45F CONCRETE OR 2" CLEAR IN CLASS 45 CONCRETE. SUCH ITEMS SHALL NOT EXCEED 1/3 OF THE MEMBER THICKNESS.

C-14 REINFORCING BARS AND ACCESSORIES SHALL NOT BE IN CONTACT WITH ANY METAL PIPE, PIPE FLANGE, METAL CONDUIT, OR OTHER METAL PARTS EMBEDDED IN CONCRETE. A MINIMUM CLEARANCE OF 2 INCHES SHALL BE PROVIDED.

C-15 ALL JOINTS WHICH ARE IN MEMBERS IN CONTACT WITH LIQUID OR BELOW GRADE SHALL HAVE A WATERSTOP. CONSTRUCTION JOINTS SHALL HAVE A 6" PVC FLATSTRIP WATERSTOP. EXPANSION JOINTS SHALL HAVE A 9" PVC CENTERBULB WATERSTOP.

C-16 IN VERTICAL JOINTS, WATERSTOP SHALL STOP NO LESS THAN 18" ABOVE THE MAXIMUM WATER SURFACE OR 18" ABOVE GRADE, WHICHEVER IS HIGHER.

C-17 AT JOINT INTERSECTIONS, WATERSTOPS SHALL BE CONNECTED SO AS TO FORM A COMPLETE SEAL USING CONNECTION PIECES AS NEEDED.

C-18 ALL EXPOSED CORNERS SHALL HAVE A 3/4" CHAMFER OR A 1/2" RADIUS TOOLED CORNER.

DEMOLITION

D-1 CONTRACTOR IS ALERTED THAT LIMITS OF DEMOLITION SHOWN IS APPROXIMATE. ACTUAL LIMITS SHALL BE THE MINIMUM REQUIRED FOR NEW STRUCTURE. CONTRACTOR TO CO-ORDINATE AND SUBMIT DEMOLITION PROCEDURE PER SPECIFICATIONS.

D-2 ALL ITEMS SHOWN ARE EXISTING TO REMAIN UNLESS NOTED OTHERWISE.

D-3 FOR ADDITIONAL DEMOLITION NOT SHOWN, SEE G, A, M, E, H AND P DRAWINGS.

D-4 ALL EXISTING CONCRETE TO BE DEMOLISHED IS STEEL REINFORCED UNLESS NOTED OTHERWISE. REINFORCING STEEL NOT SHOWN FOR CLARITY.

D-5 A TEMPORARY DEBRIS/DUST ENCLOSURE SHALL BE INSTALLED PRIOR TO ANY CONCRETE OR MASONRY DEMOLITION. DEBRIS/ DUST ENCLOSURE SHALL, AT A MINIMUM, CONFORM TO THE FOLLOWING:

- A) DEBRIS/DUST ENCLOSURE SHALL EXTEND FULL HEIGHT; FROM EXISTING FLOOR ELEVATIONS TO UNDERSIDE OF ROOF SLAB. ALL PENETRATIONS OF ENCLOSURES AROUND EXISTING STRUCTURES AND/OR EQUIPMENT SHALL BE MADE DUST-TIGHT.
- B) DEBRIS/DUST ENCLOSURE SHALL BE DESIGNED FOR A MINIMUM LATERAL LIVE LOAD OF 10 PSF (INSIDE OR OUTSIDE) PLUS A SINGLE CONCENTRATED LOAD OF 500 LBS. AT ANY POINT. DEBRIS/DUST ENCLOSURE SHALL BE DESIGNED BY A LICENSED PROFESSIONAL ENGINEER REGISTERED IN NEW YORK STATE.
- C) DEBRIS/DUST ENCLOSURE SHALL HAVE A MINIMUM CROSS SECTION OF PRESSURE TREATED 2x6'S @ 16 INCHES O.C., 3/4" PLYWOOD AND 15 MIL CLEAR POLYETHYLENE.
- D) DEBRIS/DUST ENCLOSURE SHALL BE REMOVED ONLY WHEN NEW CONCRETE AND MASONRY WORK HAS BEEN ACCEPTED.
- E) CONTRACTOR TO PROVIDE MINIMUM NUMBER OF ACCESS OPENINGS IN DEBRIS/DUST ENCLOSURE AS REQUIRED. ACCESS OPENINGS SHALL BE MADE DUST-TIGHT.

D-6 ALL DEMOLITION DEBRIS SHALL BE REMOVED OFFSITE, UNLESS ENGINEER APPROVED OTHERWISE.

BID SET

SUBMITTAL DATE: 10/2026

GRAPHIC SCALES CHECK BEFORE USE

IF SHEET IS LESS THAN 22" X 34" IT IS A REDUCED PRINT. SCALE ACCORDINGLY

NO.	DATE	REVISIONS/DESCRIPTION	APPR'D.

DESIGNED BY: JJ
CHECKED BY: JJ
DESIGN LEAD: JESSE JAECKEL, P.E.
PROJECT MANAGER: FRANK VISINGARDI JR., P.E.
DRAWN BY: AA

STATE OF NEW YORK JESSE RAY JAECKEL 092769 LICENSED PROFESSIONAL ENGINEER

Environmental Protection

ACCOUNTABLE MANAGER: STELLA UWAECHIE
PORTFOLIO MANAGER: ANDREW NG, P.E.
EXECUTIVE DIRECTOR: KENNETH E. MORIARTY, P.E.

"WARNING-IT IS A VIOLATION, OF THE NEW YORK STATE EDUCATION LAW, SECTION, 7209.2, FOR ANY PERSON, UNLESS (S)HE IS ACTING UNDER THE DIRECTION OF A LICENSED PROFESSIONAL ENGINEER, TO ALTER THIS DOCUMENT IN ANY WAY. IF ALTERED, THE ALTERING PERSON SHALL COMPLY WITH THE REQUIREMENTS OF NEW YORK EDUCATION, LAW, SECTION, 7209.2."

NEW YORK CITY ENVIRONMENTAL PROTECTION
BUREAU OF ENGINEERING DESIGN & CONSTRUCTION
96-05 HORACE HARDING EXPRESSWAY 5th FLOOR
CORONA, NEW YORK 11368
www.nyc.gov/dep

CAPITAL PROJECT WP-282
STATEN ISLAND, NY, OAKWOOD BEACH WRRF
CONTRACT OB-144A
GENERAL NOTES

DATE: OCTOBER 2026
SHEET NO: 14 OF 74
DRAWING NO. GS-001.00

All inquiries regarding this drawing(s) or project should be made to NYC Environmental Protection, Bureau of Engineering Design and Construction.

9/29/2026 2:52:32 PM Autodesk Docs://10151452_OB-144A_Oakwood_Beach_Chlorination_Improve_2023/S_HDR002_OB_CCT.rvt

ABBREVIATIONS

AB	ANCHOR BOLT
ADD'L	ADDITIONAL
ADH	ADHESIVE
ADJ	ADJUSTABLE/ADJACENT
AFF	ABOVE FINISHED FLOOR
AGG	AGGREGATE
AL	ALUMINUM
ALT	ALTERNATE
APPROX	APPROXIMATE
ARCH	ARCHITECTURAL
AVG	AVERAGE
B	BORING
BLDG	BUILDING
BM	BEAM/BENCH MARK
BOF	BOTTOM OF FOOTING
BOS	BOTTOM OF STEEL
BOT	BOTTOM
BRG	BEARING
BT	BOLT
C	CHANNEL
C TO C	CENTER TO CENTER
CANT	CANTILEVER
CJ	CONSTRUCTION JOINT
CL	CENTER LINE
CLR	CLEAR
CMU	CONCRETE MASONRY UNIT
CO	CLEAN OUT
COL	COLUMN
CONC	CONRETE
CONST	CONSTRUCTION
CONT	CONTINUOUS
CONTN	CONTINUATION
CONTR	CONTRACTOR
CP	CONCRETE PLANK
CLJ	CONTROL JOINT
CTR	CENTER
CY	CUBIC YARD
DET	DETAIL
DIA (Ø)	DIAMETER
DIAG	DIAGONAL
DIM	DIMENSION
DIST	DISTANCE
DN	DOWN
DO	DITTO
DP	DEEP
DWG	DRAWING
DWL	DOWEL
E	EAST
EA	EACH
EF	EACH FACE
EL	ELEVATION
ELEV	ELEVATOR
ENGR	ENGINEER
EMB	EMBEDMENT
ENCL	ENCLOSURE
ENT	ENTRANCE
EQ	EQUAL
EQPT	EQUIPMENT
EW	EACH WAY

EXIST	EXISTING
EXP	EXPANSION
EXP JT	EXPANSION JOINT
EXT	EXTERIOR
FAB	FABRICATE
FD	FLOOR DRAIN
FDN	FOUNDATION
FFL	FINISH FLOOR
FIN	FINISH
FLR	FLOOR
FT	FEET
FTG	FOOTING
F&C	FRAME & COVER
F&G	FRAME & GRATE
GA	GAUGE
GALV	GALVANIZE
GB	GRADE BEAM
GR	GRADE
GRTG	GRATING
HGT	HEIGHT
HORZ	HORIZONTAL
HP	HIGH POINT
HSS	HOLLOW STRUCTURAL STEEL
ID	INSIDE DIAMETER
IF	INSIDE FACE
IN	INCH
INCL	INCLUDE
INT	INTERIOR
INV	INVERT
J	JOIST
JB	JUNCTION BOX
JCT	JUNCTION
JT	JOINT
L	LENGTH/ANGLE
LF	LINEAR FEET
LG	LONG
LL	LIVE LOAD
LLH	LONG LEG HORIZONTAL
LLV	LONG LEG VERTICAL
LOC	LOCATION
LP	LOW POINT
LVR	LOUVER
LWL	LOWER WATER LEVEL
MAS	MASONRY
MATL	MATERIAL
MAX	MAXIMUM
MECH	MECHANICAL
MET	METAL
MFR	MANUFACTURER
MG	MILLION GALLONS
MGD	MILLION GALLONS PER DAY
MH	MANHOLE
MIN	MINIMUM
MISC	MISCELLANEOUS
MO	MASONRY OPENING
MOD	MODIFY/MODIFIED
MTD	MOUNTED

N	NORTH
NA	NOT APPLICABLE
NIC	NOT IN CONTRACT
NO	NUMBER
NOM	NOMINAL
NTS	NOT TO SCALE
OC	ON CENTER
OD	OUTSIDE DIAMETER
OF	OUTSIDE FACE
OPNG	OPENING
OPP	OPPOSITE
OT	OPEN TRUSS
OVHD	OVERHEAD
PAR	PARALLEL
PC	POINT OF CURVE/PIECE
PCO	PILE CUT OFF
PI	POINT OF INTERSECTION
PL	PLATE/PROPERTY LINE
PREFAB	PREFABRICATED POUNDS
PSF	PER SQUARE FOOT POUNDS
PSI PT	PER SQUARE INCH POINT
PTN	PARTITION
PVMT	PAVEMENT
QTY	QUANTITY
R	RISER
RAD	RADIUS
RCP	REINFORCED CONCRETE PIPE
RD	ROOF DRAIN
REINF	REINFORCEMENT
RECT	RECTANGULAR
REM	REMOVE
REQD	REQUIRED
RF	ROOF
RO	ROUGH OPENING
S	SOUTH
SCHED	SCHEDULE
SECT	SECTION
SF	SQUARE FEET
SHT	SHEET
SIM	SIMILAR
SJ	STEEL JOIST
SPEC	SPECIFICATION
SQ	SQUARE
SS	STAINLESS STEEL
STA	STATION
STD	STANDARD
STR	STAIR
STIF	STIFFENER
STIR	STIRRUP
STL	STEEL
STRUC	STRUCTURAL
SUB	SUBSTITUTE
SYM	SYMMETRICAL

T	TREAD
T&B	TOP AND BOTTOM
T&G	TONGUE AND GROOVE
TAN	TANGENT
TEMP	TEMPERATURE
THK	THICK
TOC	TOP OF CURB/CONCRETE
TOD	TOP OF DECK
TOF	TOP OF FOOTING
TOM	TOP OF MASONRY/MANHOLE
TOS	TOP OF SLAB/STEEL
TOW	TOP OF WALL
TYP	TYPICAL
UNO	UNLESS NOTED OTHERWISE
W	WEST/WIDTH/WIDE FLANGE
W/	WITH
W/O	WITHOUT
WL	WATER LEVEL
WP	WATERPROOF/WALL PIPE
WPT	WALL PENETRATING TYPE
WS	WATER SURFACE
WT	WEIGHT
WWF	WELDED WIRE FABRIC
YD	YARD
YR	YEAR

BID SET

SUBMITTAL DATE: 10/2026

GRAPHIC SCALES CHECK BEFORE USE

IF SHEET IS LESS THAN 22" X 34" IT IS A REDUCED PRINT. SCALE ACCORDINGLY

NO.	DATE	REVISIONS/DESCRIPTION	APPR'D.

DESIGNED BY: JJ
CHECKED BY: JJ
DESIGN LEAD: JESSE JAECKEL, P.E.
PROJECT MANAGER: FRANK VISINGARDI JR., P.E.
DRAWN BY: AA

STATE OF NEW YORK · JESSE RAY JAECKEL · 092769 · LICENSED PROFESSIONAL ENGINEER

Environmental Protection

ACCOUNTABLE MANAGER: STELLA UWAECHIE
PORTFOLIO MANAGER: ANDREW NG, P.E.
EXECUTIVE DIRECTOR: KENNETH E. MORIARTY, P.E.

"WARNING–IT IS A VIOLATION, OF THE NEW YORK STATE EDUCATION LAW, SECTION, 7209.2, FOR ANY PERSON, UNLESS (S)HE IS ACTING UNDER THE DIRECTION OF A LICENSED PROFESSIONAL ENGINEER, TO ALTER THIS DOCUMENT IN ANY WAY. IF ALTERED, THE ALTERING PERSON SHALL COMPLY WITH THE REQUIREMENTS OF NEW YORK EDUCATION, LAW, SECTION, 7209.2."

NEW YORK CITY ENVIRONMENTAL PROTECTION
BUREAU OF ENGINEERING DESIGN & CONSTRUCTION
96-05 HORACE HARDING EXPRESSWAY 5th FLOOR
CORONA, NEW YORK 11368
www.nyc.gov/dep

CAPITAL PROJECT WP-282
STATEN ISLAND, NY, OAKWOOD BEACH WRRF
CONTRACT OB-144A
ABBREVIATIONS

DATE: OCTOBER 2026
SHEET NO: 15 OF 74
DRAWING NO. GS-002.00

All inquiries regarding this drawing(s) or project should be made to NYC Environmental Protection, Bureau of Engineering Design and Construction.

9/29/2026 2:52:32 PM Autodesk Docs://10151452_OB-144A_Oakwood_Beach_Chlorination_Improve_2023/S_HDR002_OB_CCT.rvt

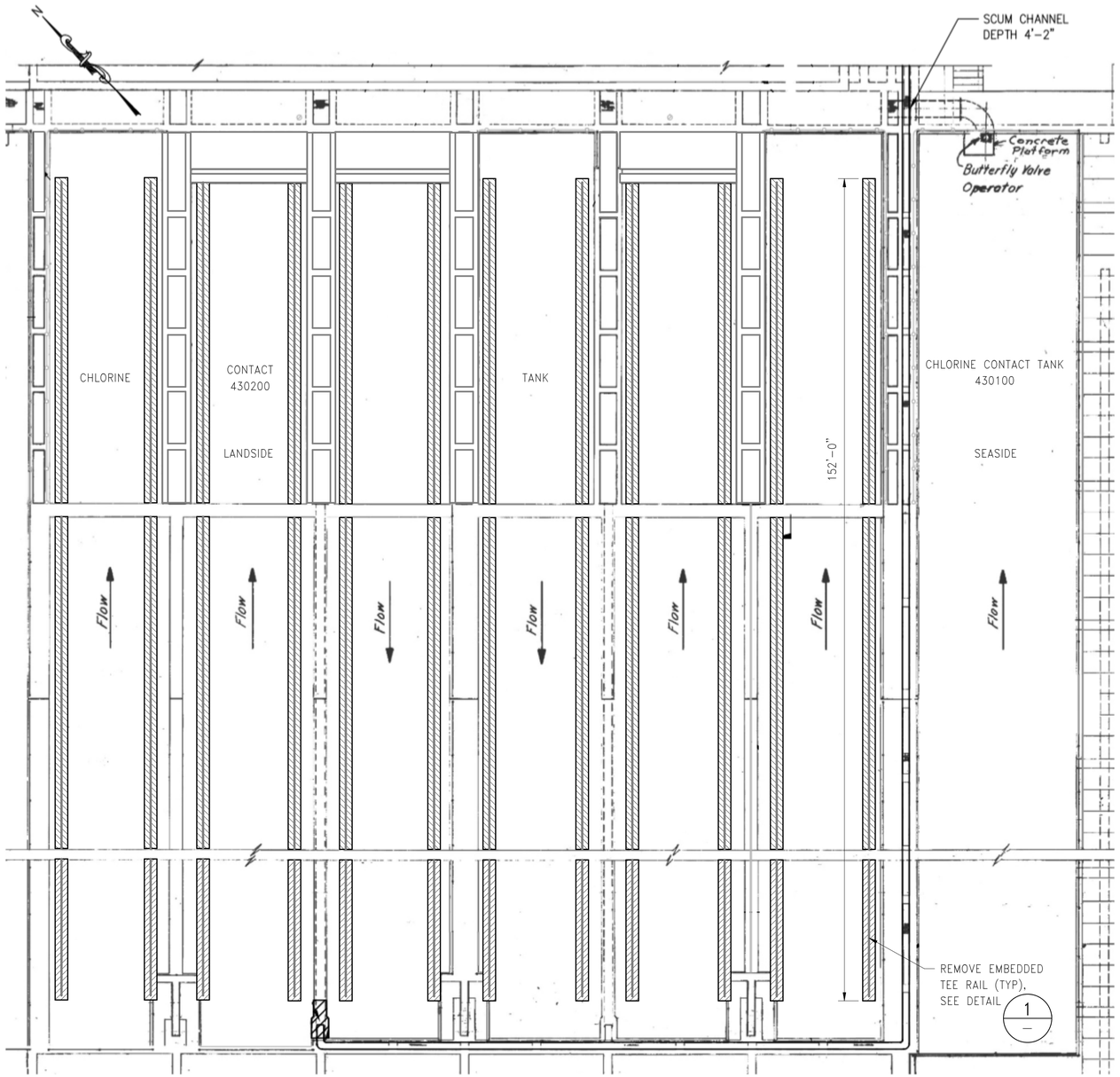

LANDSIDE CHLORINE CONTACT TANK – DEMOLITION PLAN

SCALE: 1/8"=1'-0"

LEGEND:

DEMOLITION

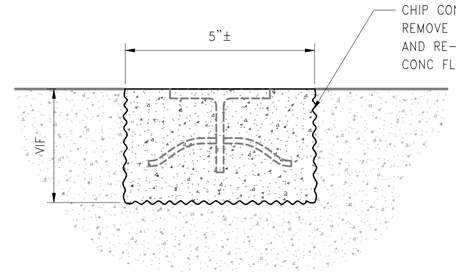

1 – TEE RAIL REMOVAL DETAIL

NOT TO SCALE

DEMOLITION NOTES:

DEMOLITION NOTES:

1. CONTRACTOR SHALL NOT DAMAGE EXISTING REBAR.
2. CONTRACTOR SHALL FIELD VERIFY ALL DIMENSIONS BEFORE COMMENCING WORK. NOTIFY ENGINEEER IF FIELD DIMENSIONS DIFFER FROM HISTORICAL INFORMATION OF DIMENSIONS GIVEN ON THIS DRAWING.

BID SET

SUBMITTAL DATE: 10/2026

GRAPHIC SCALES CHECK BEFORE USE

IF SHEET IS LESS THAN 22" X 34" IT IS A REDUCED PRINT. SCALE ACCORDINGLY

NO.	DATE	REVISIONS/DESCRIPTION	APPR'D.

DESIGNED BY: JR
DRAWN BY: AA
CHECKED BY: JJ
DESIGN LEAD: JESSE JAECKEL, P.E.
PROJECT MANAGER: FRANK VISINGARDI JR., P.E.

STATE OF NEW YORK JESSE RAY JAECKEL 092769 LICENSED PROFESSIONAL ENGINEER

Environmental Protection

ACCOUNTABLE MANAGER
STELLA UWAECHIE
PORTFOLIO MANAGER
ANDREW NG, P.E.
EXECUTIVE DIRECTOR
KENNETH E. MORIARTY, P.E.

"WARNING–IT IS A VIOLATION, OF THE NEW YORK STATE EDUCATION LAW, SECTION, 7209.2, FOR ANY PERSON, UNLESS (S)HE IS ACTING UNDER THE DIRECTION OF A LICENSED PROFESSIONAL ENGINEER, TO ALTER THIS DOCUMENT IN ANY WAY. IF ALTERED, THE ALTERING PERSON SHALL COMPLY WITH THE REQUIREMENTS OF NEW YORK EDUCATION, LAW, SECTION, 7209.2."

NEW YORK CITY ENVIRONMENTAL PROTECTION
BUREAU OF ENGINEERING DESIGN & CONSTRUCTION
96-05 HORACE HARDING EXPRESSWAY 5th FLOOR
CORONA, NEW YORK 11368
www.nyc.gov/dep

CAPITAL PROJECT WP-282
STATEN ISLAND, NY, OAKWOOD BEACH WRRF
CONTRACT OB-144A

LANDSIDE CHLORINE CONTACT TANK 430200 TEE RAIL DEMOLITION PLAN AND DETAIL

DATE: OCTOBER 2026
SHEET NO: 16 OF 74
DRAWING NO. DS-001.00

All inquiries regarding this drawing(s) or project should be made to NYC Environmental Protection, Bureau of Engineering Design and Construction.

9/29/2026 2:52:32 PM Autodesk Docs://10151452_OB-144A_Oakwood_Beach_Chlorination_Improve_2023/S_HDR002_OB_CCT.rvt

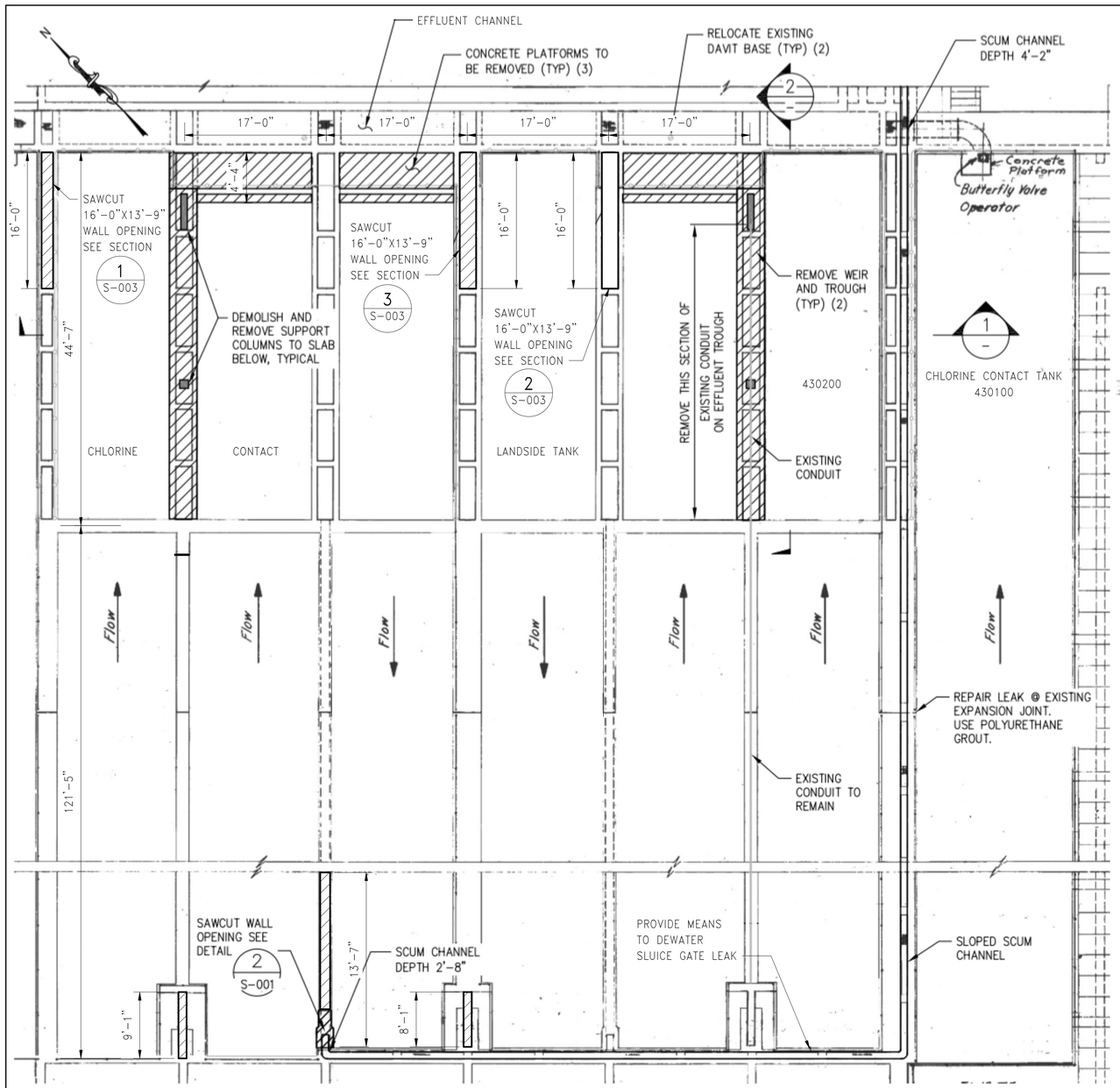

LANDSIDE CHLORINE CONTACT TANK 430200 – DEMOLITION PLAN

SCALE: 1/8"=1'-0"

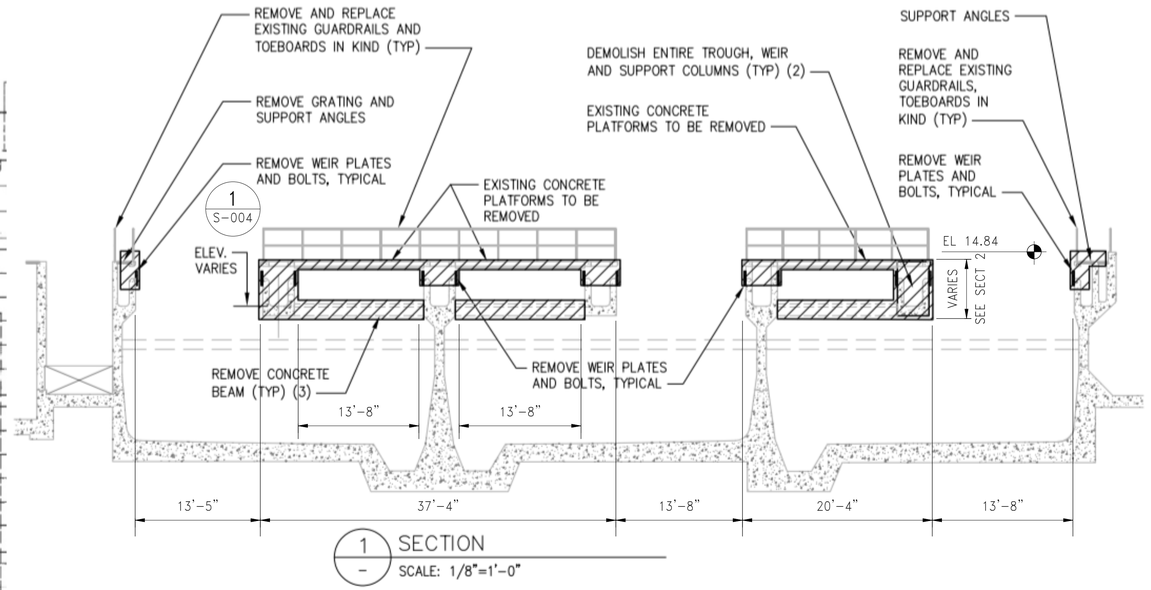

1 / - SECTION

SCALE: 1/8"=1'-0"

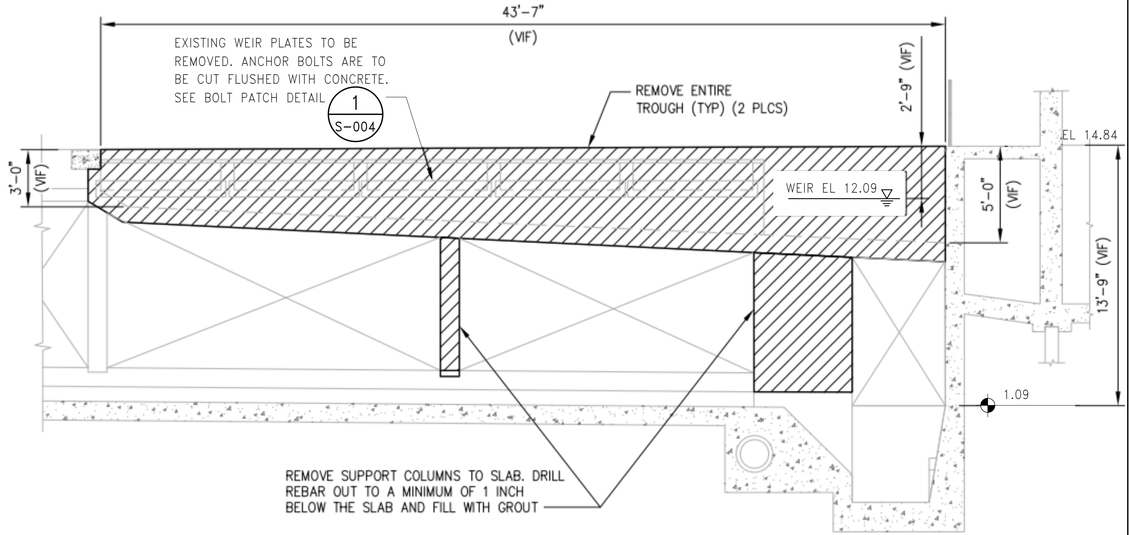

2 / - SECTION

SCALE: 1/4"=1'-0"

DEMOLITION NOTES:

1. CONTRACTOR TO PROTECT ALL EXISTING UTILITIES.
2. CONTRACTOR SHALL NOT DAMAGE EXISTING REBAR.
3. CONTRACTOR SHALL FIELD VERIFY ALL DIMENSIONS BEFORE COMMENCING WORK. NOTIFY ENGINEER IF FIELD DIMENSIONS DIFFER FROM HISTORICAL INFORMATION OR DIMENSIONS GIVEN ON THIS DRAWING.
4. SEE S-004 & S-005 FOR TYPICAL GUARDRAIL, RAILING AND TOEBOARD DETAILS.

LEGEND:

DEMOLITION

1/8"=1'-0" 0 5 10 15 FT.

1/4"=1'-0" 1 4 8 FT.

BID SET

SUBMITTAL DATE: 10/2026

GRAPHIC SCALES CHECK BEFORE USE

IF SHEET IS LESS THAN 22" X 34" IT IS A REDUCED PRINT. SCALE ACCORDINGLY

NO.	DATE	REVISIONS/DESCRIPTION	APPR'D.
1			
2			
3			
4			
5			

DESIGNED BY: JR
CHECKED BY: JJ
DESIGN LEAD: JESSE JAECKEL, P.E.
PROJECT MANAGER: FRANK VISINGARDI JR., P.E.
DRAWN BY: AA

STATE OF NEW YORK JESSE RAY JAECKEL 092769 LICENSED PROFESSIONAL ENGINEER

NYC Environmental Protection

ACCOUNTABLE MANAGER: STELLA UWAECHIE
PORTFOLIO MANAGER: ANDREW NG, P.E.
EXECUTIVE DIRECTOR: KENNETH E. MORIARTY, P.E.

"WARNING–IT IS A VIOLATION, OF THE NEW YORK STATE EDUCATION LAW, SECTION, 7209.2, FOR ANY PERSON, UNLESS (S)HE IS ACTING UNDER THE DIRECTION OF A LICENSED PROFESSIONAL ENGINEER, TO ALTER THIS DOCUMENT IN ANY WAY. IF ALTERED, THE ALTERING PERSON SHALL COMPLY WITH THE REQUIREMENTS OF NEW YORK EDUCATION, LAW, SECTION, 7209.2."

NEW YORK CITY ENVIRONMENTAL PROTECTION
BUREAU OF ENGINEERING DESIGN & CONSTRUCTION
96-05 HORACE HARDING EXPRESSWAY 5th FLOOR
CORONA, NEW YORK 11368
www.nyc.gov/dep

CAPITAL PROJECT WP-282
STATEN ISLAND, NY, OAKWOOD BEACH WRRF
CONTRACT OB-144A
LANDSIDE CHLORINE CONTACT TANK 430200
DEMOLITION PLAN AND SECTIONS

DATE: OCTOBER 2026
SHEET NO: 17 OF 74
DRAWING NO. DS-002.00

All inquiries regarding this drawing(s) or project should be made to NYC Environmental Protection, Bureau of Engineering Design and Construction.

9/29/2026 2:52:32 PM Autodesk Docs://10151452_OB-144A_Oakwood_Beach_Chlorination_Improve_2023/S_HDR002_OB_CCT.rvt

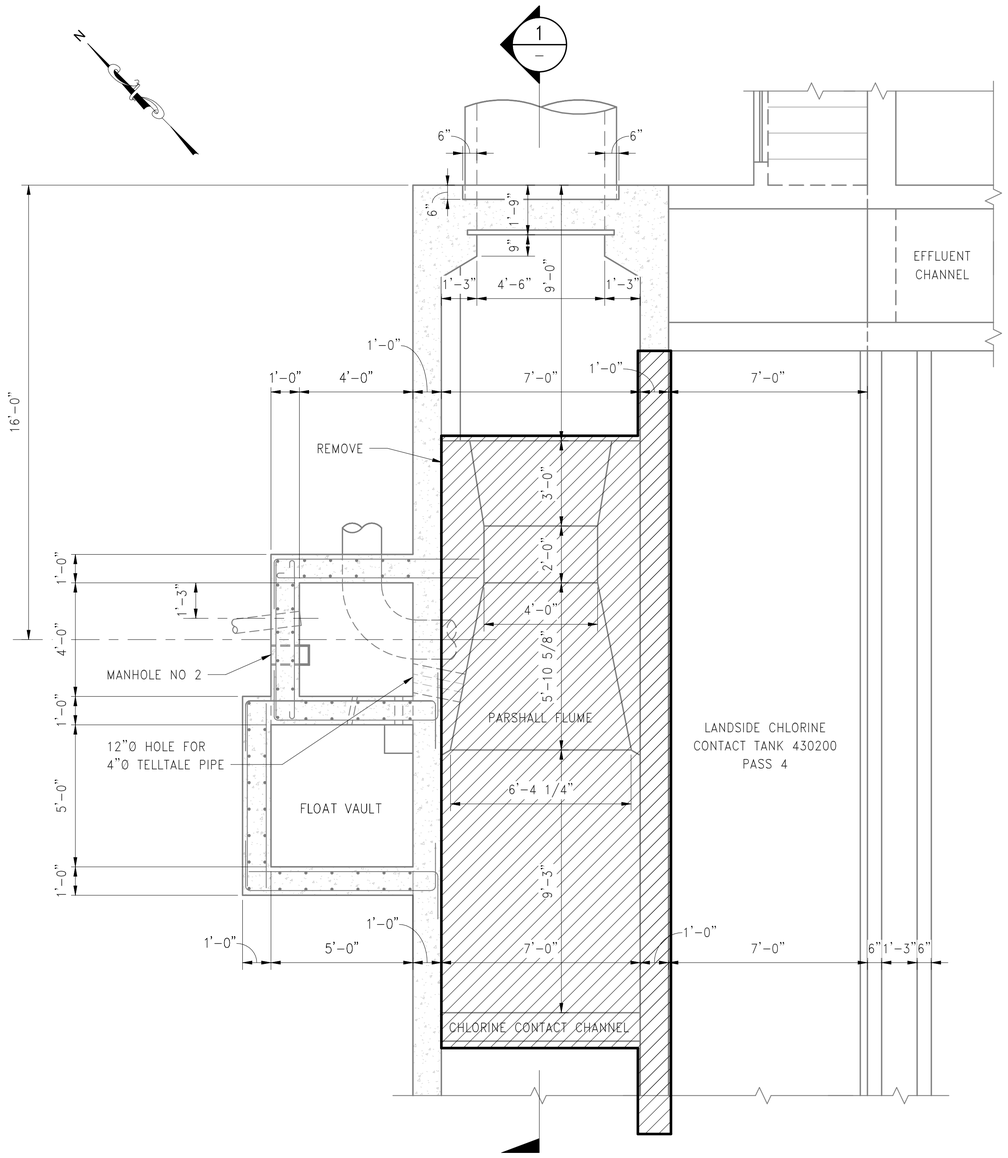

PARSHALL FLUME DEMOLITION PLAN

SCALE: 3/8" = 1'-0"

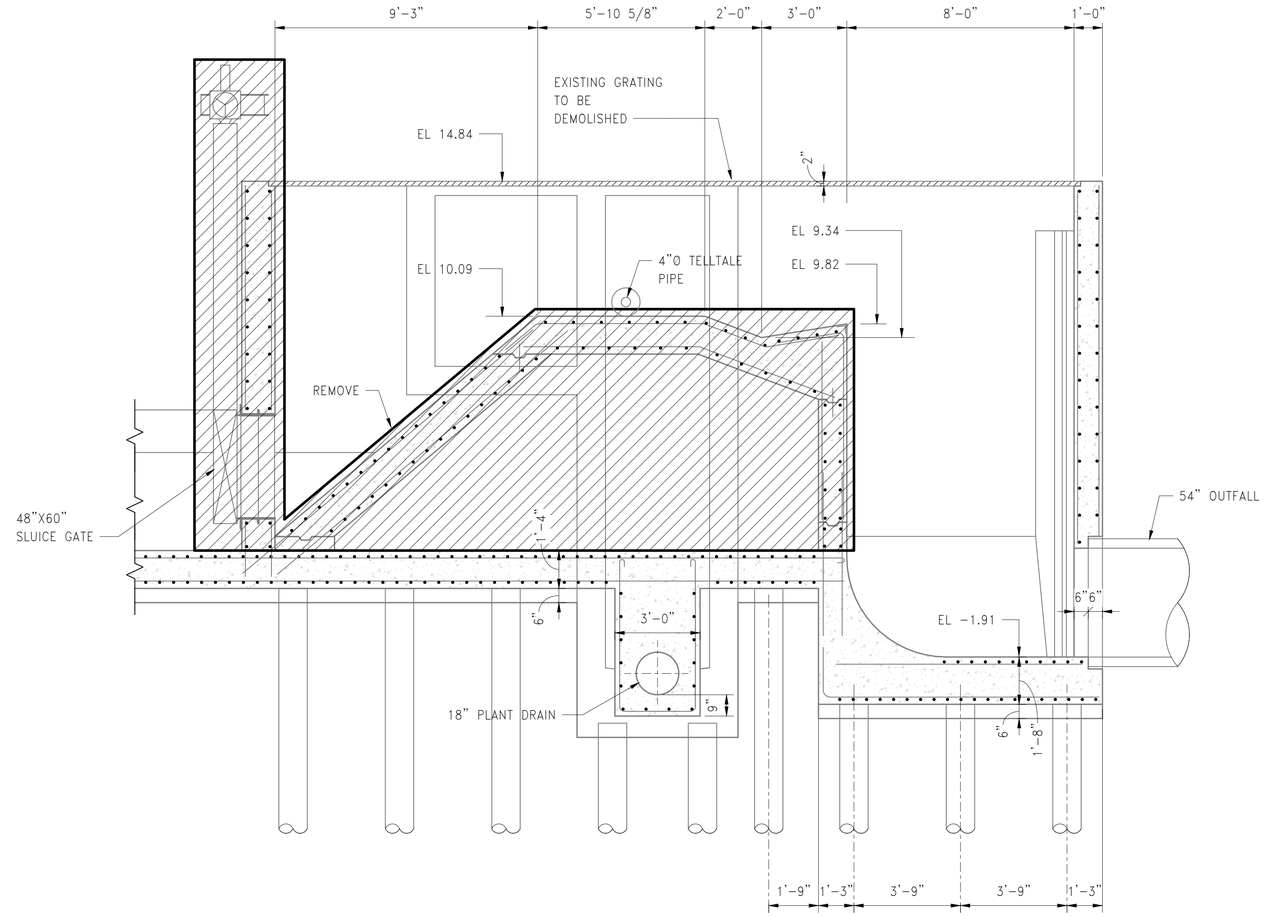

1 SEC TION

SCALE: 3/8" = 1'-0"

LEGEND:

DEMOLITION

3/8"=1'-0" 0 1 2 3 5 FT.

BID SET

SUBMITTAL DATE: 10/2026

GRAPHIC SCALES
CHECK BEFORE USE

IF SHEET IS LESS THAN 22" X 34"
IT IS A REDUCED PRINT.
SCALE ACCORDINGLY

NO.	DATE	REVISIONS/DESCRIPTION	APPR'D.

DESIGNED BY: JR
DRAWN BY: AA
CHECKED BY: JJ
DESIGN LEAD: JESSE JAECKEL, P.E.
PROJECT MANAGER: FRANK VISINGARDI JR., P.E.

STATE OF NEW YORK JESSE RAY JAECKEL 092769 LICENSED PROFESSIONAL ENGINEER

Environmental Protection

ACCOUNTABLE MANAGER
STELLA UWAECHIE
PORTFOLIO MANAGER
ANDREW NG, P.E.
EXECUTIVE DIRECTOR
KENNETH E. MORIARTY, P.E.

"WARNING–IT IS A VIOLATION, OF THE NEW YORK STATE EDUCATION LAW, SECTION, 7209.2, FOR ANY PERSON, UNLESS (S)HE IS ACTING UNDER THE DIRECTION OF A LICENSED PROFESSIONAL ENGINEER, TO ALTER THIS DOCUMENT IN ANY WAY. IF ALTERED, THE ALTERING PERSON SHALL COMPLY WITH THE REQUIREMENTS OF NEW YORK EDUCATION, LAW, SECTION, 7209.2."

NEW YORK CITY ENVIRONMENTAL PROTECTION
BUREAU OF ENGINEERING DESIGN & CONSTRUCTION
96-05 HORACE HARDING EXPRESSWAY 5th FLOOR
CORONA, NEW YORK 11368
www.nyc.gov/dep

CAPITAL PROJECT WP-282
STATEN ISLAND, NY, OAKWOOD BEACH WRRF
CONTRACT OB-144A
LANDSIDE CHLORINE CONTACT TANK 430200
PARSHALL FLUME DEMOLITION PLAN AND SECTION

DATE: OCTOBER 2026
SHEET NO: 18 OF 74
DRAWING NO. DS-003.00

All inquiries regarding this drawing(s) or project should be made to NYC Environmental Protection, Bureau of Engineering Design and Construction.

9/29/2026 2:52:33 PM Autodesk Docs://10151452_OB-144A_Oakwood_Beach_Chlorination_Improve_2023/S_HDR002_OB_CCT.rvt

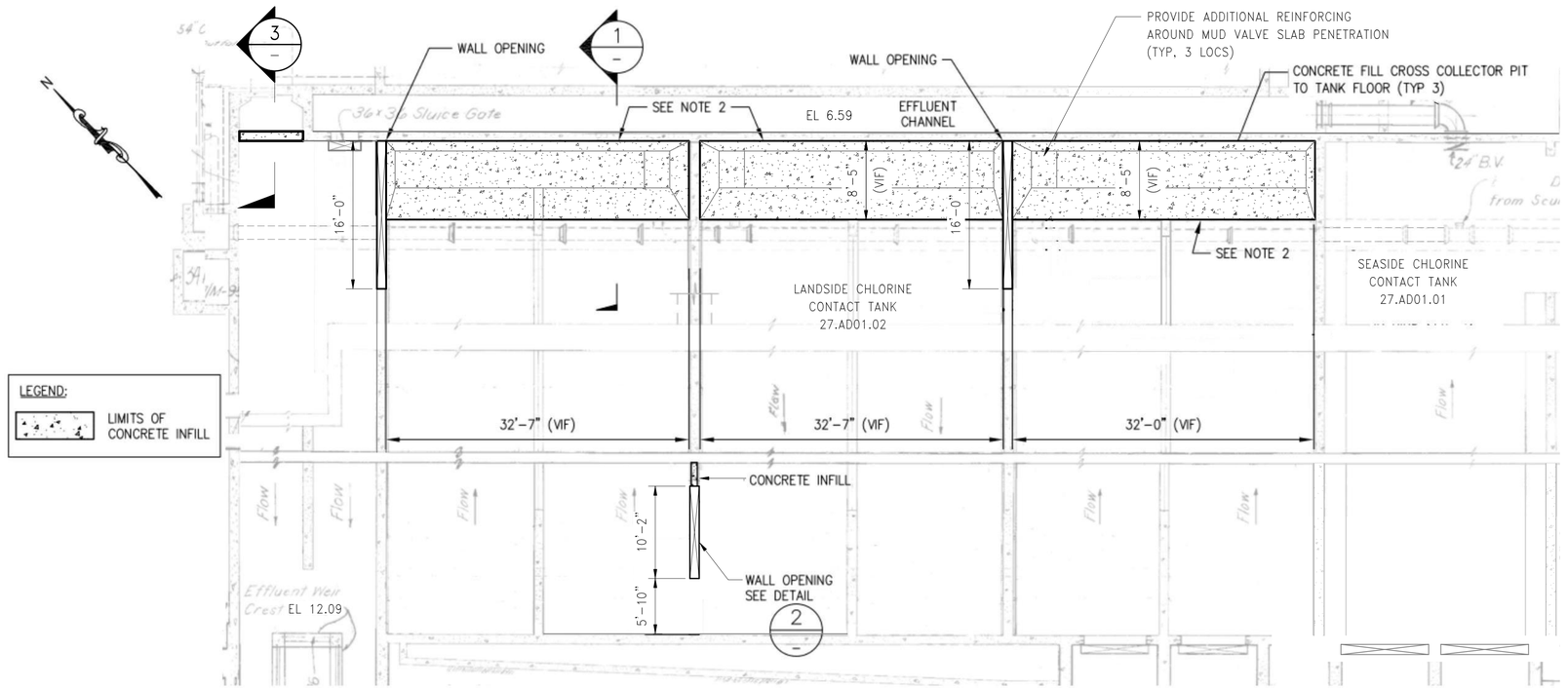

CONCRETE CROSS COLLECTOR PIT – FILL PLAN

SCALE: 1/8"=1 '-0"

NOTES:
1. VIF = CONTRACTOR TO FIELD VERIFY DIMENSION BEFORE PROCEEDING WITH WORK.
2. CONCRETE TO BE CLASS 40LW LIGHTWEIGHT CONCRETE.

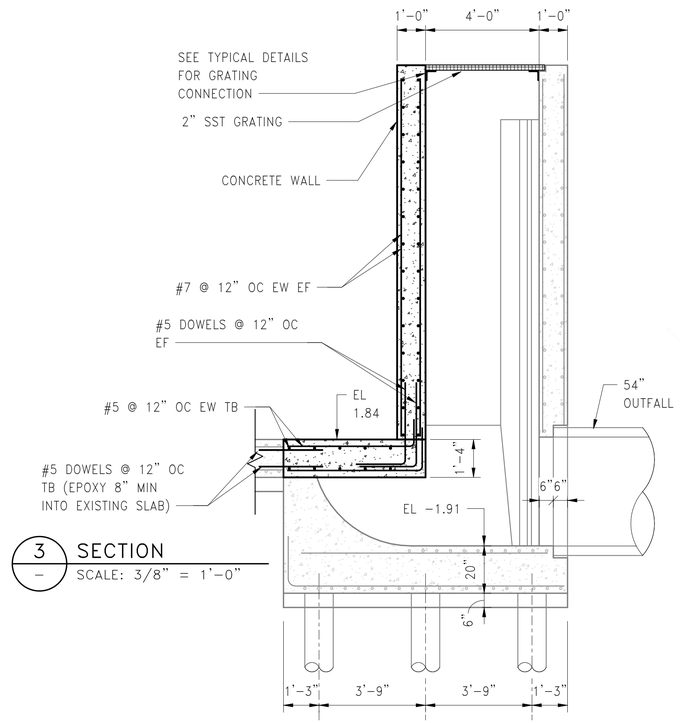

3/– SECTION
SCALE: 3/8" = 1'-0"

NOTES:

1. CLEAN CROSS COLLECTOR PIT (ALL SIDES THAT WILL BE IN CONTACT WITH NEW CONCRETE) WITH 3000 PSI PRESSURE POWER WASH. CONTRACTOR TO VERIFY THAT EXPOSED CONCRETE MEETS A ROUGHENED SURFACE OF 1/4" AMPLITUDE OR GREATER. WHERE CONCRETE DOES NOT MEET THIS REQUIREMENT, ROUGHEN TO 1/4" AMPLITUDE.
2. APPLY BONDING AGENT TO ROUGHENED SURFACE.
3. #5 REINFORCING BARS SHALL BE EPOXIED INTO EXISTING CROSS COLLECTOR PIT WALLS AT AN EMBEDMENT DEPTH OF 4" (MIN).
4. CONTRACTOR SHALL FIELD VERIFY ALL DIMENSIONS BEFORE COMMENCING WORK. IF ANY FIELD DIMENSIONS DIFFER FROM HISTORICAL DOCUMENTS OR THOSE OUTLINED ON THIS DRAWING, NOTIFY ENGINEER.

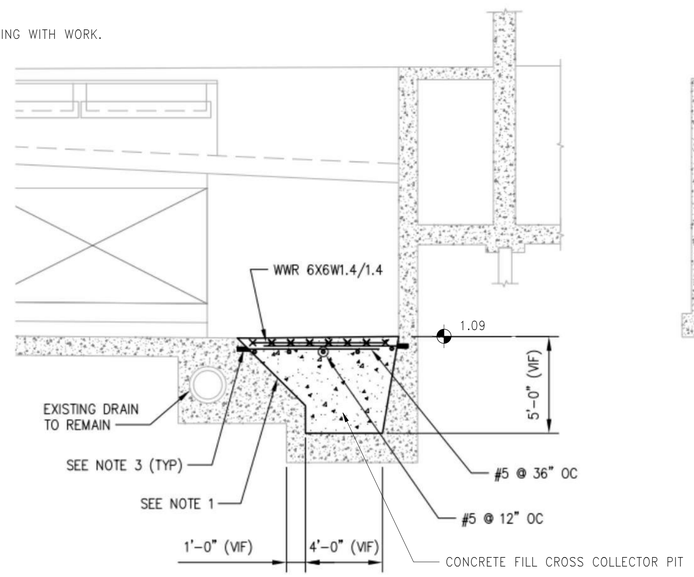

1/– SECTION
SCALE: 1/4"=1'-0"

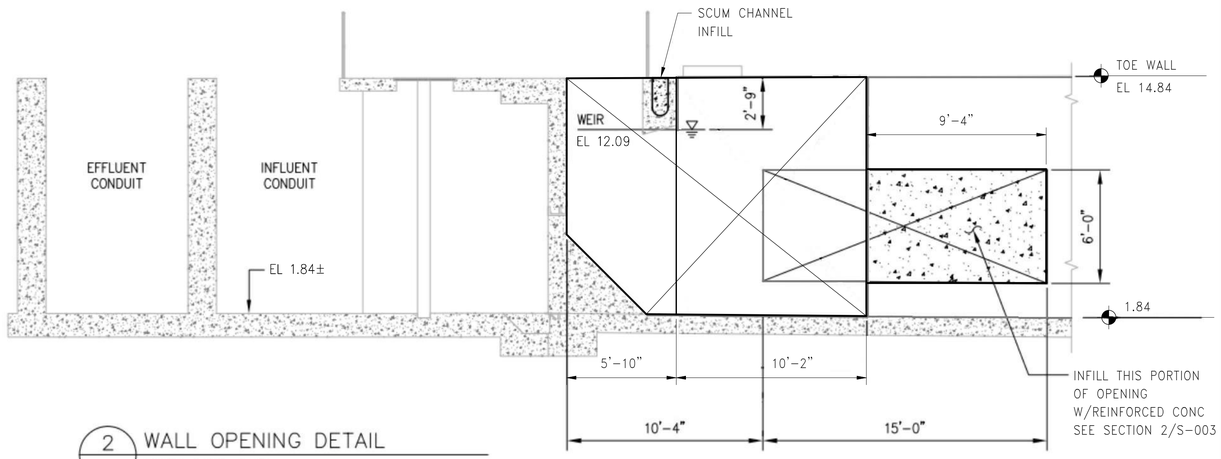

2/– WALL OPENING DETAIL
SCALE: 1/4"=1'-0"

TYPICAL WALL CUTOUT NOTE:

1. SAWCUT EXISTING CONCRETE WALL TO THE DIMENSIONS OUTLINED ON THIS DETAIL.

1/8"=1'-0" 0 5 10 15 FT.

1/4"=1'-0" 1 4 8 FT.

BID SET

SUBMITTAL DATE: 10/2026

GRAPHIC SCALES CHECK BEFORE USE

IF SHEET IS LESS THAN 22" X 34" IT IS A REDUCED PRINT. SCALE ACCORDINGLY

NO.	DATE	REVISIONS/DESCRIPTION	APPR'D.

DESIGNED BY: JR
DRAWN BY: AA
CHECKED BY: JJ
DESIGN LEAD: JESSE JAECKEL, P.E.
PROJECT MANAGER: FRANK VISINGARDI JR., P.E.

STATE OF NEW YORK JESSE RAY JAECKEL 092769 LICENSED PROFESSIONAL ENGINEER

NYC Environmental Protection

ACCOUNTABLE MANAGER: STELLA UWAECHIE
PORTFOLIO MANAGER: ANDREW NG, P.E.
EXECUTIVE DIRECTOR: KENNETH E. MORIARTY, P.E.

"WARNING–IT IS A VIOLATION, OF THE NEW YORK STATE EDUCATION LAW, SECTION, 7209.2, FOR ANY PERSON, UNLESS (S)HE IS ACTING UNDER THE DIRECTION OF A LICENSED PROFESSIONAL ENGINEER, TO ALTER THIS DOCUMENT IN ANY WAY. IF ALTERED, THE ALTERING PERSON SHALL COMPLY WITH THE REQUIREMENTS OF NEW YORK EDUCATION, LAW, SECTION, 7209.2."

NEW YORK CITY ENVIRONMENTAL PROTECTION
BUREAU OF ENGINEERING DESIGN & CONSTRUCTION
96-05 HORACE HARDING EXPRESSWAY 5th FLOOR
CORONA, NEW YORK 11368
www.nyc.gov/dep

CAPITAL PROJECT WP-282
STATEN ISLAND, NY, OAKWOOD BEACH WRRF
CONTRACT OB-144A
LANDSIDE CHLORINE CONTACT TANK 27.AD01.02
CROSS COLLECTOR PIT AND WALL OPENINGS PLAN, SECTIONS AND DETAIL

DATE: OCTOBER 2026
SHEET NO: 19 OF 74
DRAWING NO. S-001.00

All inquiries regarding this drawing(s) or project should be made to NYC Environmental Protection, Bureau of Engineering Design and Construction.

9/29/2026 2:52:33 PM Autodesk Docs://10151452_OB-144A_Oakwood_Beach_Chlorination_Improve_2023/S_HDR002_OB_CCT.rvt

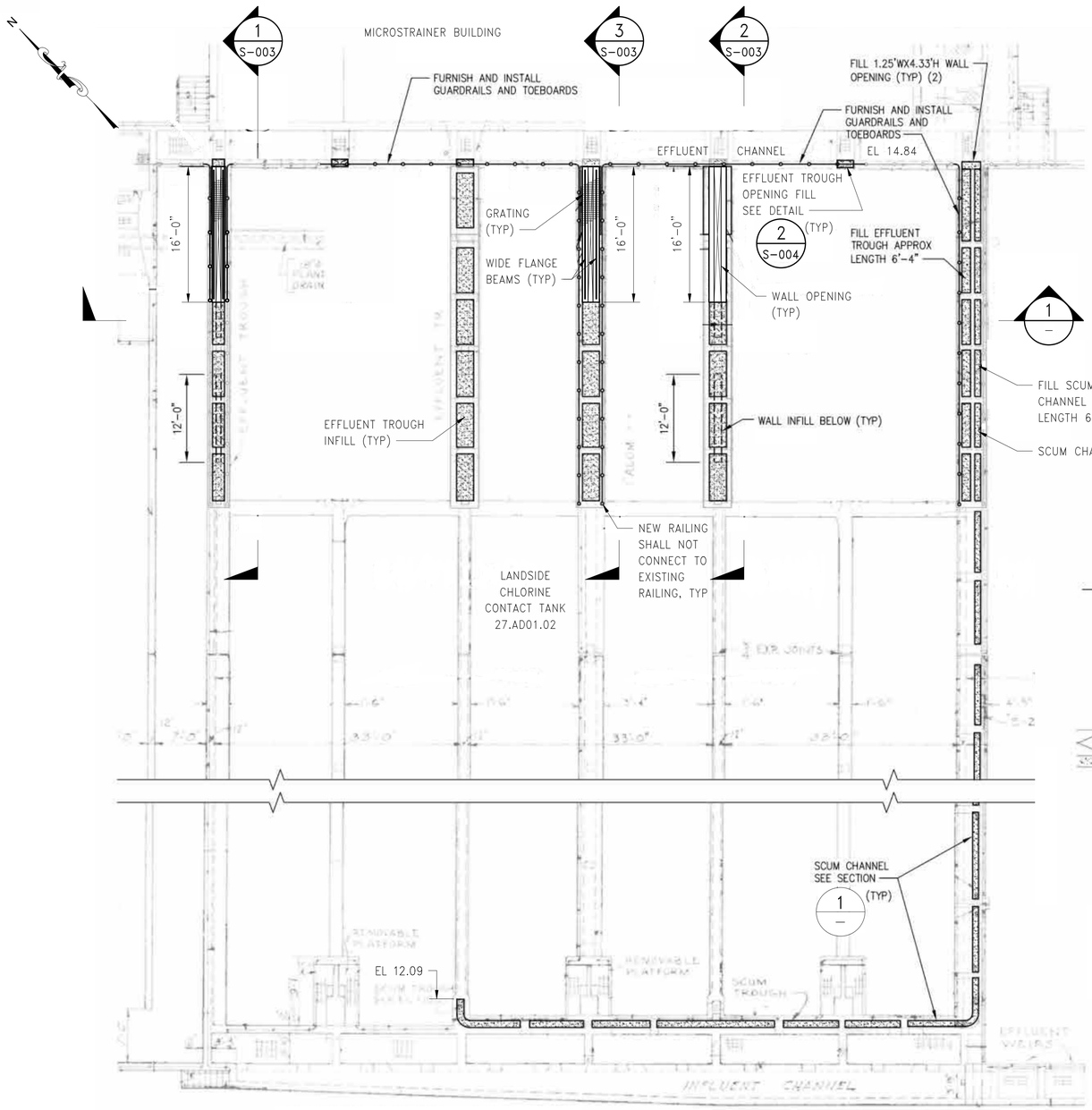

EFFLUENT TROUGH AND SCUM CHANNEL – INFILL PLAN

SCALE: 1/8"=1 '-0"

NOTES:

1. AFTER DEMOLITION, CONTRACTOR SHALL ROUGHEN SURFACE TO 1/4" CONCRETE SURFACE FOR PLACEMENT OF NEW CONCRETE.
2. APPLY BONDING AGENT TO ROUGHENED SURFACE.
3. CONCRETE INFILL SHALL BE CLASS 40LW LIGHTWEIGHT CONCRETE.

LEGEND:

CONCRETE INFILL

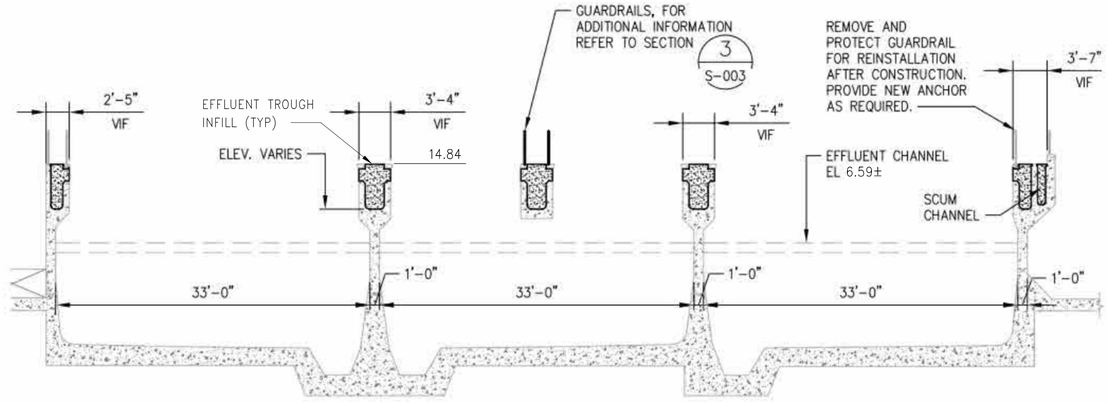

1 – SECTION

SCALE: 1/8" = 1'-0"

1/8"=1'-0" 0 5 10 15 FT.

BID SET

SUBMITTAL DATE: 10/2026

GRAPHIC SCALES CHECK BEFORE USE

IF SHEET IS LESS THAN 22" X 34" IT IS A REDUCED PRINT. SCALE ACCORDINGLY

NO.	DATE	REVISIONS/DESCRIPTION	APPR'D.

DESIGNED BY: JR
DRAWN BY: AA
CHECKED BY: JJ
DESIGN LEAD: JESSE JAECKEL, P.E.
PROJECT MANAGER: FRANK VISINGARDI JR., P.E.

STATE OF NEW YORK JESSE RAY JAECKEL 092759 LICENSED PROFESSIONAL ENGINEER

Environmental Protection

ACCOUNTABLE MANAGER
STELLA UWAECHIE
PORTFOLIO MANAGER
ANDREW NG, P.E.
EXECUTIVE DIRECTOR
KENNETH E. MORIARTY, P.E.

"WARNING–IT IS A VIOLATION, OF THE NEW YORK STATE EDUCATION LAW, SECTION, 7209.2, FOR ANY PERSON, UNLESS (S)HE IS ACTING UNDER THE DIRECTION OF A LICENSED PROFESSIONAL ENGINEER, TO ALTER THIS DOCUMENT IN ANY WAY. IF ALTERED, THE ALTERING PERSON SHALL COMPLY WITH THE REQUIREMENTS OF NEW YORK EDUCATION, LAW, SECTION, 7209.2."

NEW YORK CITY ENVIRONMENTAL PROTECTION
BUREAU OF ENGINEERING DESIGN & CONSTRUCTION
96-05 HORACE HARDING EXPRESSWAY 5th FLOOR
CORONA, NEW YORK 11368
www.nyc.gov/dep

CAPITAL PROJECT WP-282
STATEN ISLAND, NY, OAKWOOD BEACH WRRF
CONTRACT OB-144A
LANDSIDE CHLORINE CONTACT TANK 27.AD01.02
EFFLUENT TROUGH AND SCUM CHANNEL INFILL PLAN AND SECTION

DATE: OCTOBER 2026
SHEET NO: 20 OF 74
DRAWING NO. S-002.00

All inquiries regarding this drawing(s) or project should be made to NYC Environmental Protection, Bureau of Engineering Design and Construction.

9/29/2026 2:52:33 PM Autodesk Docs://10151452_OB-144A_Oakwood_Beach_Chlorination_Improve_2023/S_HDR002_OB_CCT.rvt

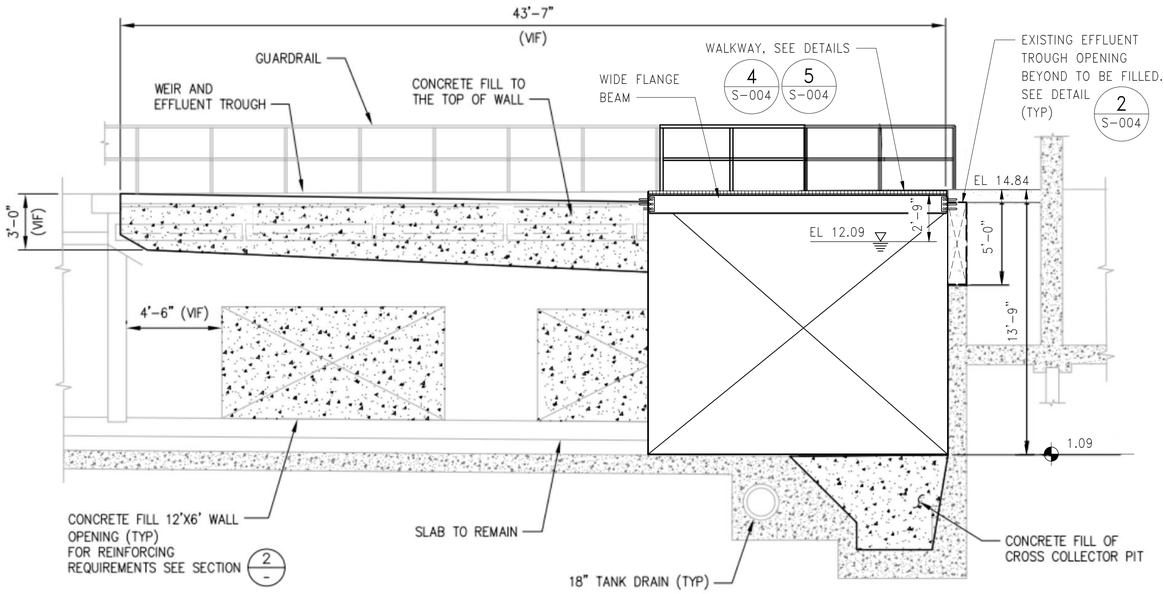

1 / S-002 SECTION
SCALE: 1/4"=1'-0"

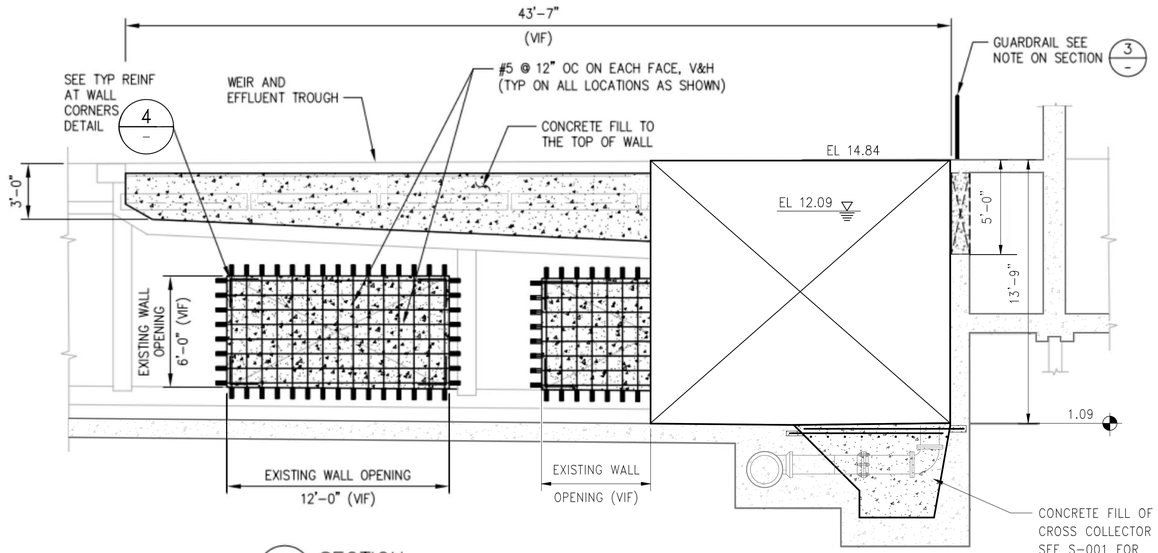

2 / S-002 SECTION
SCALE: 1/4"=1'-0"

LEGEND:

LIMITS OF CONCRETE INFILL

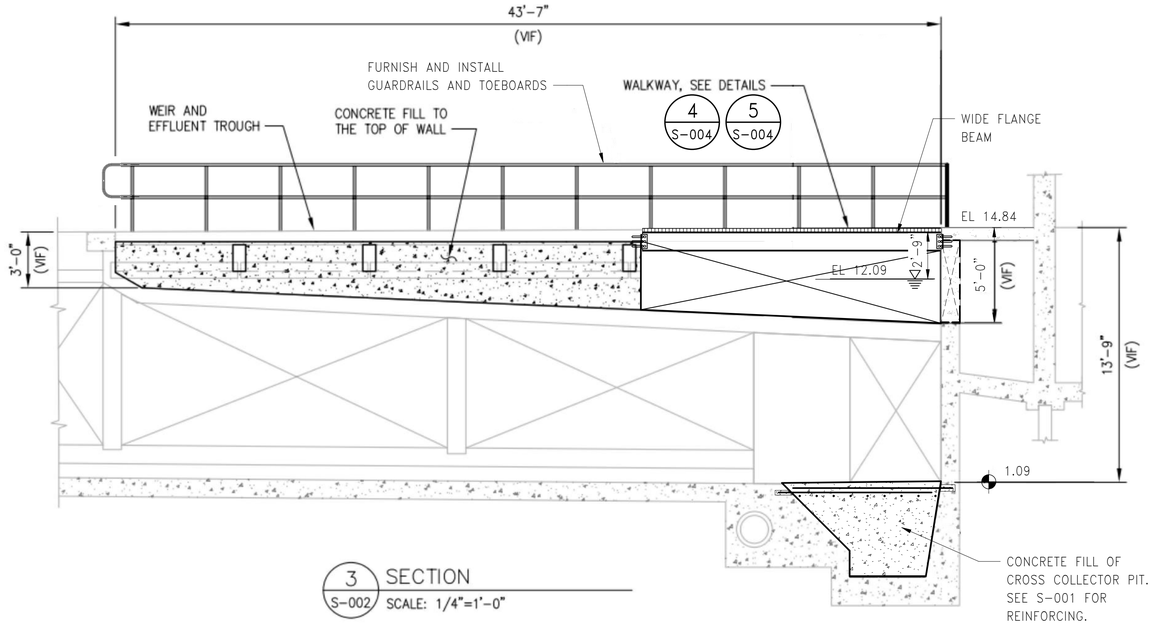

3 / S-002 SECTION
SCALE: 1/4"=1'-0"

NOTES:

1. ROUGHEN EXISTING CONCRETE SURFACE AROUND EXISTING OPENINGS ON ALL 4 SIDES TO 1/4" AMPLITUDE TO ALLOW FOR PLACEMENT OF NEW CONCRETE. DO NOT CUT OR DAMAGE EXISTING REBAR.
2. APPLY BONDING AGENT TO ROUGHENED SURFACE.
3. CONTRACTOR SHALL FIELD VERIFY ALL DIMENSIONS BEFORE COMMENCING WORK. IF ANY FIELD DIMENSIONS DIFFER FROM HISTORICAL DOCUMENTS OR THOSE OUTLINED ON THIS SECTION, NOTIFY ENGINEER.
4. EPOXY NEW VERTICAL REINFORCING INTO EXISTING 12" SLAB BELOW WITH 6" EMBEDMENT.
5. CONCRETE TO BE CLASS 40LW LIGHTWEIGHT CONCRETE.

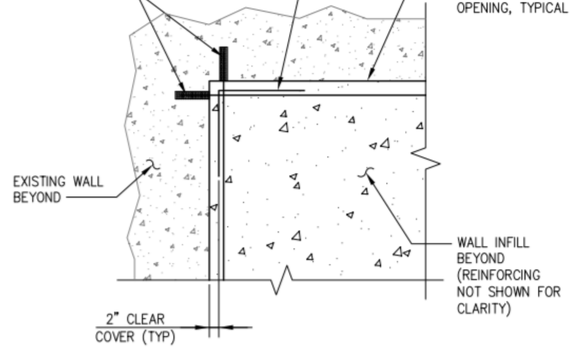

NOTES:

1. CORNER BARS TO MATCH HORIZONTAL AND VERTICAL BAR SIZE AND SPACING.
2. SPLICE CORNER BARS A MINIMUM OF 40D.
3. #5 REINFORCING BARS SHALL BE EPOXED INTO EXISTING WALLS AT AN EMBEDMENT DEPTH OF 6" (MIN).

4 / - TYPICAL REINFORCING AT WALL CORNERS DETAIL
SCALE: 3/4" = 1'-0"

3/4"=1'-0" 0 1 2 3 FT.

1/4"=1'-0" 1 4 8 FT.

BID SET

SUBMITTAL DATE: 10/2026

GRAPHIC SCALES
CHECK BEFORE USE

IF SHEET IS LESS THAN 22" X 34"
IT IS A REDUCED PRINT.
SCALE ACCORDINGLY

NO.	DATE	REVISIONS/DESCRIPTION	APPR'D.

DESIGNED BY: JR
CHECKED BY: JJ
DESIGN LEAD: JESSE JAECKEL, P.E.
PROJECT MANAGER: FRANK VISINGARDI JR., P.E.
DRAWN BY: AA

STATE OF NEW YORK · JESSE RAY JAECKEL · 092769 · LICENSED PROFESSIONAL ENGINEER

NYC Environmental Protection

ACCOUNTABLE MANAGER
STELLA UWAECHIE
PORTFOLIO MANAGER
ANDREW NG, P.E.
EXECUTIVE DIRECTOR
KENNETH E. MORIARTY, P.E.

"WARNING–IT IS A VIOLATION, OF THE NEW YORK STATE EDUCATION LAW, SECTION, 7209.2, FOR ANY PERSON, UNLESS (S)HE IS ACTING UNDER THE DIRECTION OF A LICENSED PROFESSIONAL ENGINEER, TO ALTER THIS DOCUMENT IN ANY WAY. IF ALTERED, THE ALTERING PERSON SHALL COMPLY WITH THE REQUIREMENTS OF NEW YORK EDUCATION, LAW, SECTION, 7209.2."

NEW YORK CITY ENVIRONMENTAL PROTECTION
BUREAU OF ENGINEERING DESIGN & CONSTRUCTION
96-05 HORACE HARDING EXPRESSWAY 5th FLOOR
CORONA, NEW YORK 11368
www.nyc.gov/dep

CAPITAL PROJECT WP-282
STATEN ISLAND, NY, OAKWOOD BEACH WRRF
CONTRACT OB-144A
CHLORINE CONTACT TANKS
SECTIONS AND DETAIL

DATE: OCTOBER 2026
SHEET NO: 21 OF 74
DRAWING NO. S-003.00

All inquiries regarding this drawing(s) or project should be made to NYC Environmental Protection, Bureau of Engineering Design and Construction.

9/29/2026 2:52:34 PM Autodesk Docs://10151452_OB-144A_Oakwood_Beach_Chlorination_Improve_2023/S_HDR002_OB_CCT.rvt

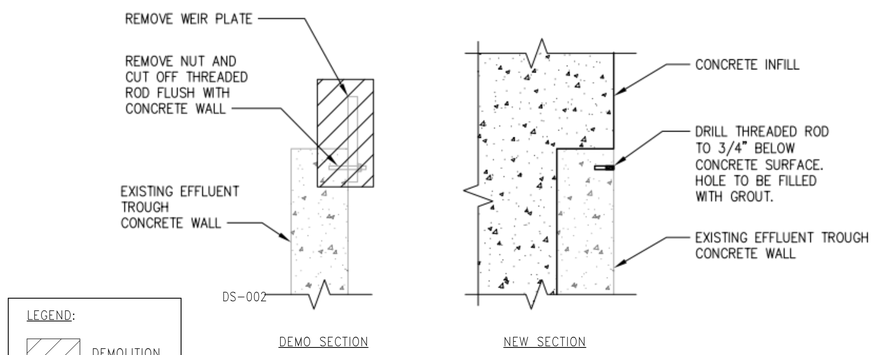

1 BOLT PATCH DETAIL
DS-002 SCALE: 3/4" = 1'-0"

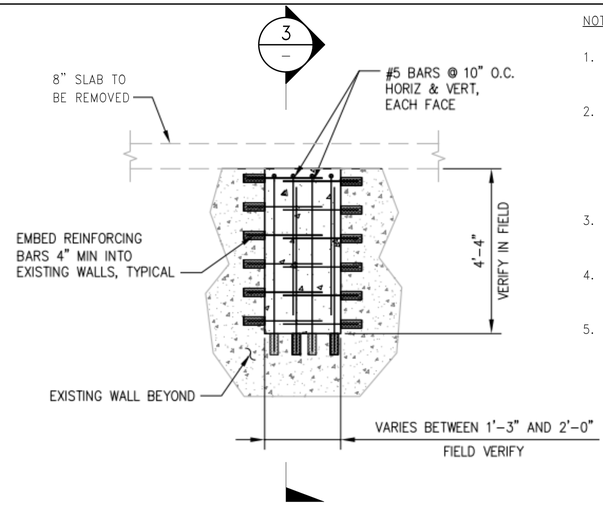

2 TYPICAL EFFLUENT TROUGH OPENING FILL DETAIL
S-002 SCALE: 1/2" = 1'-0"

NOTES:

1. SEE S-002 FOR LOCATIONS OF EFFLUENT TROUGH OPENING FILL.
2. ROUGHEN EXISTING CONCRETE SURFACE AROUND EXISTING OPENINGS TO 1/4" AMPLITUDE TO ALLOW FOR PLACEMENT OF NEW CONCRETE.
3. APPLY BONDING AGENT TO ROUGHENED SURFACE.
4. CONCRETE SHALL BE CLASS 40LW LIGHTWEIGHT CONCRETE.
5. CONTRACTOR SHALL FIELD VERIFY ALL DIMENSIONS OF EXISTING OPENING BEFORE COMMENCING WORK.

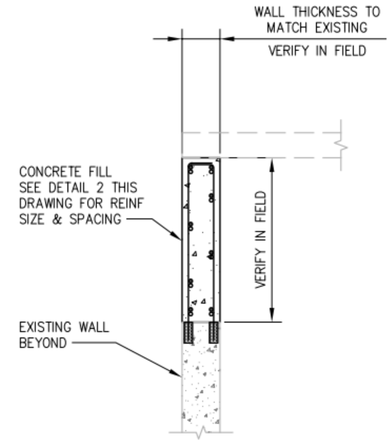

3 SECTION
SCALE: 1/2" = 1'-0"

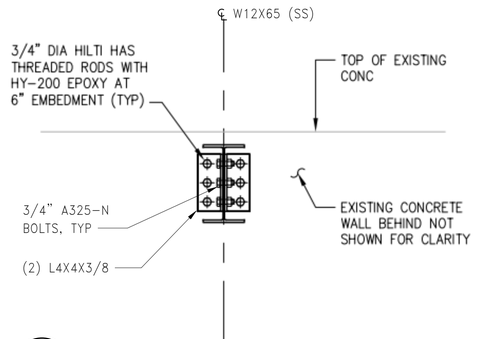

4 BEAM CONNECTION DETAIL
S-003 SCALE: 1" = 1'-0"

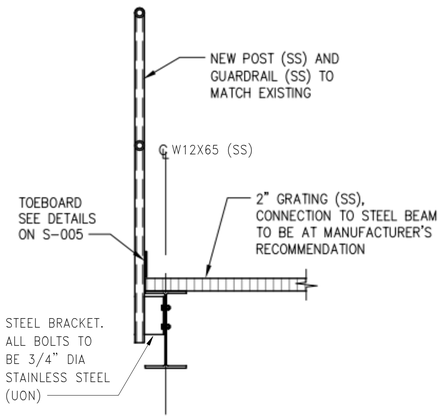

5 GUARDRAIL DETAIL
S-003 SCALE: 1" = 1'-0"

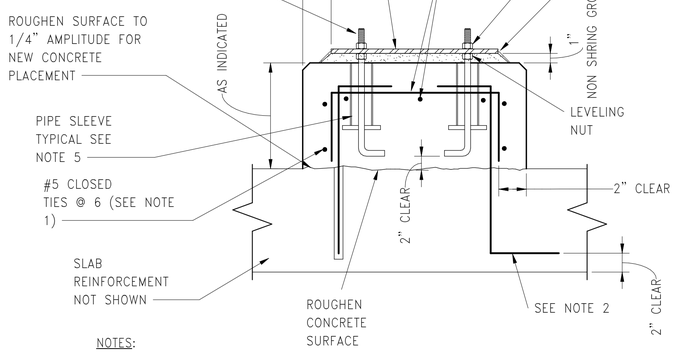

NOTES:

1. FOR NEW EQUIPMENT BASES ON EXISTING SLABS, DRILL INTO EXISTING SLAB TO DEVELOPMENT DEPTH AT 12" CENTERS AROUND PERIMETER OF EQUIPMENT BASE AND SET #5 HOOKED DOWELS IN EPOXY GROUT.
2. FOR EQUIPMENT BASES ON NEW SLABS, PROVIDE #5 DOWELS HAVING TWO HOOKED ENDS AT 12" CENTERS AROUND PERIMETER OF EQUIPMENT BASE.
3. EQUIPMENT BASE DIMENSIONS SHALL BE AS REQUIRED BY THE APPROVED SHOP DRAWINGS
4. ANCHOR BOLTS AS RECOMMENDED BY THE EQUIPMENT MANUFACTURER. BOLTS SHALL BE HELD IN POSITION WITH A TEMPLATE WHILE THE EQUIPMENT BASE IS BEING CAST.
5. PIPE SLEEVES SHALL BE USED TO PROVIDE THE ANCHOR BOLT A MINIMUM MOVEMENT OF 1/2" IN ALL DIRECTIONS. MINIMUM SLEEVE LENGTH SHALL BE 8X THE BOLT DIAMETER. SLEEVES SHALL BE FILLED WITH NON-SHRINK GROUT. PIPE SLEEVES SHALL HAVE A MINIMUM INTERNAL DIAMETER 1" GREATER THAN THE BOLT DIAMETER AND A MAXIMUM INTERNAL DIAMETER OF 3" GREATER THAN THE BOLT DIAMETER.
6. EQUIPMENT BASES SHALL BE INSTALLED LEVEL. TOLERANCE IS 1/16"

6 EQUIPMENT PAD DETAIL
NOT TO SCALE

0 1 2 FT.
1"=1'-0"

0 1 2 3 FT.
3/4"=1'-0"

0 1 2 4 FT.
1/2"=1'-0"

BID SET

SUBMITTAL DATE: 10/2026

GRAPHIC SCALES CHECK BEFORE USE

IF SHEET IS LESS THAN 22" X 34" IT IS A REDUCED PRINT. SCALE ACCORDINGLY

NO.	DATE	REVISIONS/DESCRIPTION	APPR'D.

DESIGNED BY: JR
CHECKED BY: JJ
DESIGN LEAD: JESSE JAECKEL, P.E.
PROJECT MANAGER: FRANK VISINGARDI JR., P.E.
DRAWN BY: AA

STATE OF NEW YORK — JESSE RAY JAECKEL — 092769 — LICENSED PROFESSIONAL ENGINEER

Environmental Protection

ACCOUNTABLE MANAGER: STELLA UWAECHIE
PORTFOLIO MANAGER: ANDREW NG, P.E.
EXECUTIVE DIRECTOR: KENNETH E. MORIARTY, P.E.

"WARNING-IT IS A VIOLATION, OF THE NEW YORK STATE EDUCATION LAW, SECTION, 7209.2, FOR ANY PERSON, UNLESS (S)HE IS ACTING UNDER THE DIRECTION OF A LICENSED PROFESSIONAL ENGINEER, TO ALTER THIS DOCUMENT IN ANY WAY. IF ALTERED, THE ALTERING PERSON SHALL COMPLY WITH THE REQUIREMENTS OF NEW YORK EDUCATION, LAW, SECTION, 7209.2."

NEW YORK CITY ENVIRONMENTAL PROTECTION
BUREAU OF ENGINEERING DESIGN & CONSTRUCTION
96-05 HORACE HARDING EXPRESSWAY 5th FLOOR
CORONA, NEW YORK 11368
www.nyc.gov/dep

CAPITAL PROJECT WP-282
STATEN ISLAND, NY, OAKWOOD BEACH WRRF
CONTRACT OB-144A
CHLORINE CONTACT TANKS
SECTION AND DETAILS

DATE: OCTOBER 2026
SHEET NO: 22 OF 74
DRAWING NO. S-004.00

All inquiries regarding this drawing(s) or project should be made to NYC Environmental Protection, Bureau of Engineering Design and Construction.

9/29/2026 2:52:34 PM Autodesk Docs://10151452_OB-144A_Oakwood_Beach_Chlorination_Improve_2023/S_HDR002_OB_CCT.rvt

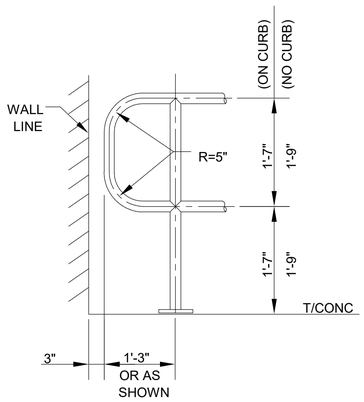

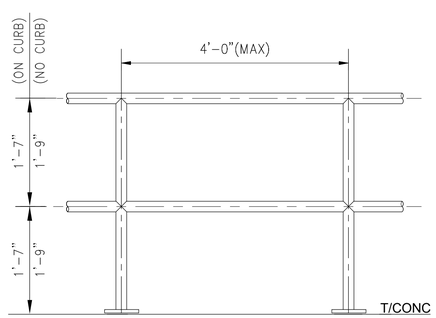

END POST RETURN DETAIL

1 – RAILING DETAILS
NOT TO SCALE

PIPE RAILING NOTES:

1. ALL MATERIAL TO BE STAINLESS STEEL TYPE 316 OR 316L (FOR WELDED CONSTRUCTION) UNLESS NOTED OTHERWISE.
2. ALL STAIRS SHOWN ON THE CONTRACT DRAWINGS SHALL BE PROVIDED WITH RAILINGS.
3. ALL RAILING SHALL BE DOUBLE PIPE RAILING UNLESS NOTED OTHERWISE.
4. PIPE RAILING SHALL BE AS FOLLOWS:
   a. RAILS AND STANCHIONS (POSTS) SHALL BE STAINLESS STEEL MECHANICAL TUBING, ASTM A554, GRADE MT316L ANNEALED, 1.90" OD x 0.109" WALL THICKNESS (SCHEDULE 10S)
   b. POSTS SHALL BE REINFORCED INTERNALLY (FULL LENGTH) WITH AN INSERT OF STAINLESS STEEL PIPE, ASTM A312, GRADE TP316L, 1.66" OD x 0.140" WALL THICKNESS (SCHEDULE 40S).
5. UNLESS NOTED OTHERWISE THE MAXIMUM SPACING OF POSTS SHALL BE 4'–0".
6. PIPE RAILING SHALL BE WELDED, GROUND SMOOTH AND FINISHED, ALL AS FURTHER DETAILED IN THE SPECIFICATION.
7. EXPANSION AND FIELD CONNECTION JOINTS ARE APPLICABLE TO ALL TYPES. IN ADDITION, DRAINAGE AND WEEP HOLES SHALL BE PROVIDED WITHIN RAIL ASSEMBLIES.
8. SLIP–ON COVER FLANGES (ESCUTCHEONS) SHALL BE PROVIDED ONLY AT LOCATIONS DESIGNATED ON THE CONTRACT DRAWINGS.
9. SLOPING RAILING/HANDRAIL EXTENSIONS SHALL BE PROVIDED AT THE BOTTOM OF STAIRS (EXTENDING 12" FROM BOTTOM STAIR TREAD NOSING) WHERE RAILING IS NON–CONTINUOUS BETWEEN STAIR RUNS. IN ADDITION, HORIZONTAL RAILING/HANDRAIL EXTENSIONS (EXTENDING 12" FROM TOP STAIR TREAD NOSING) SHALL BE PROVIDED WHERE RAILING IS NON–CONTINUOUS BETWEEN STAIR RUNS.
10. MILL TEST REPORTS SHALL BE FURNISHED, GUARANTEEING 75,000 PSI MINIMUM TENSILE STRENGTH AND 30,000 PSI MINIMUM YIELD STRENGTH FOR STAINLESS STEEL PIPE RAILING INCLUDING PIPE INSERTS. SEE SPECIFICATION FOR TESTING REFERENCE STANDARDS.
11. VARIATIONS OF RAILING BENDS AND LOOPS NOT SHOWN ON THESE DETAILS SHALL BE SUBMITTED TO THE ENGINEER FOR APPROVAL PRIOR TO FABRICATION.

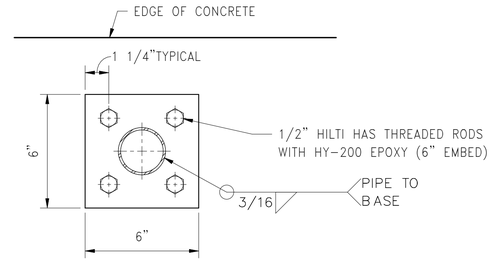

3 – STEEL POST BASE PLATE DETAIL
NOT TO SCALE

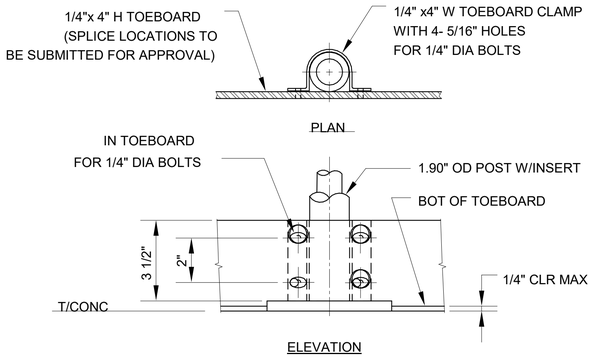

BOLTED CONNECTION AT POST

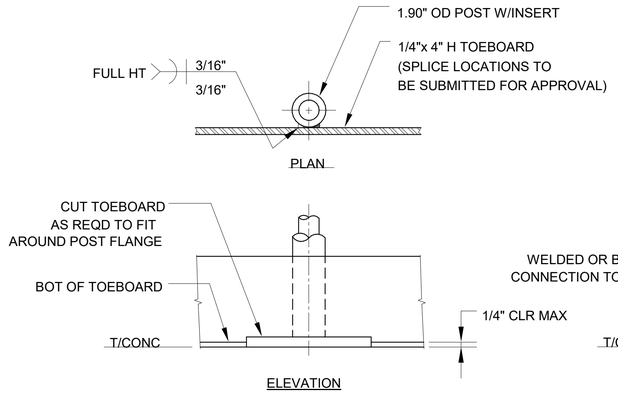

WELDED CONNECTION AT POST

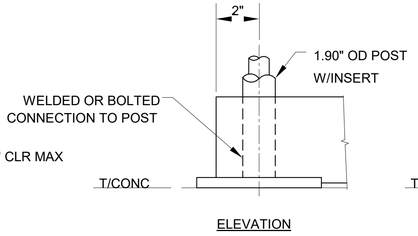

TERMINATION AT POST

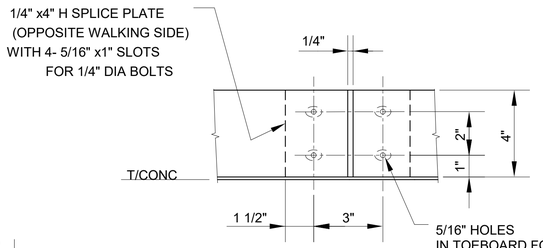

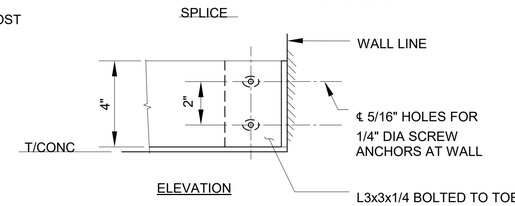

TERMINATION AT WALL

TOEBOARD NOTES

1. CORNERS AT RAILING RUNS SHALL BE SPLICED WITH BENT PLATE USING SIMILAR HARDWARE AND CLEARANCES.
2. TOEBOARD SPLICES SHALL BE PROVIDED AT RAILING SPLICES.
3. WELDED POST CONNECTIONS SHALL BE USED BUT THE CONTRACTOR MAY SUBSTITUTE BOLTED POST CONNECTIONS WITH THE ENGINEERS APPROVAL.
4. CHAMFER OR FILLET ANY EXPOSED TOP CORNERS OF TOEBOARDS.
5. EXTEND TOEBOARDS THE LENGTH OF RAILING RETURNS WHERE SHOWN ON THE DRAWINGS.
6. TOEBOARDS SHALL BE PROVIDED AT STAIR RUNS IN ACCORDANCE WITH THE NYC BUILDING CODE AND WHERE NOTED ON THE DRAWINGS. IN SUMMARY, THE TRIANGULAR OPENINGS AT THE OPEN SIDES OF A STAIR, FORMED BY THE RISER, TREAD AND BOTTOM RAIL SHALL NOT ALLOW PASSAGE OF A SPHERE SIX (6) INCHES IN DIAMETER.

2 – TOEBOARD DETAILS
NOT TO SCALE

BID SET

SUBMITTAL DATE: 10/2026

GRAPHIC SCALES CHECK BEFORE USE

IF SHEET IS LESS THAN 22" X 34" IT IS A REDUCED PRINT. SCALE ACCORDINGLY

NO.	DATE	REVISIONS/DESCRIPTION	APPR'D.

DESIGNED BY: JJ
CHECKED BY: JJ
DESIGN LEAD: JESSE JAECKEL, P.E.
PROJECT MANAGER: FRANK VISINGARDI JR., P.E.
DRAWN BY: AA

ACCOUNTABLE MANAGER
STELLA UWAECHIE
PORTFOLIO MANAGER
ANDREW NG, P.E.
EXECUTIVE DIRECTOR
KENNETH E. MORIARTY, P.E.

"WARNING–IT IS A VIOLATION, OF THE NEW YORK STATE EDUCATION LAW, SECTION, 7209.2, FOR ANY PERSON, UNLESS (S)HE IS ACTING UNDER THE DIRECTION OF A LICENSED PROFESSIONAL ENGINEER, TO ALTER THIS DOCUMENT IN ANY WAY. IF ALTERED, THE ALTERING PERSON SHALL COMPLY WITH THE REQUIREMENTS OF NEW YORK EDUCATION, LAW, SECTION, 7209.2."

NEW YORK CITY ENVIRONMENTAL PROTECTION
BUREAU OF ENGINEERING DESIGN & CONSTRUCTION
96-05 HORACE HARDING EXPRESSWAY 5th FLOOR
CORONA, NEW YORK 11368
www.nyc.gov/dep

CAPITAL PROJECT WP-282
STATEN ISLAND, NY, OAKWOOD BEACH WRRF
CONTRACT OB-144A
CHLORINE CONTACT TANKS
RAILINGS AND TOEBOARD DETAILS

DATE: OCTOBER 2026
SHEET NO: 23 OF 74
DRAWING NO. S–005.00

9/29/2026 2:52:34 PM Autodesk Docs://10151452_OB-144A_Oakwood_Beach_Chlorination_Improve_2023/S_HDR002_OB_CCT.rvt

All inquiries regarding this drawing(s) or project should be made to NYC Environmental Protection, Bureau of Engineering Design and Construction.

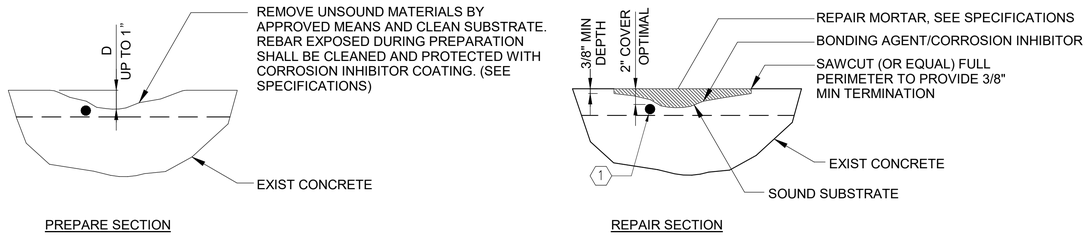

PREPARE SECTION

REPAIR SECTION

THIN LOCAL CONCRETE SPALL REPAIR (NO INITIALLY EXPOSED REINFORCING)

1 CONCRETE REPAIR TYPE 1 DETAIL
NOT TO SCALE

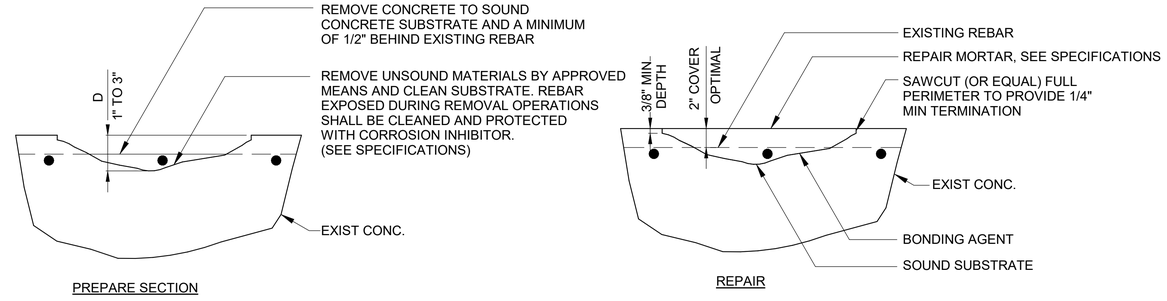

PREPARE SECTION

REPAIR

MODERATE LOCAL CONCRETE SPALL REPAIR

2 CONCRETE REPAIR TYPE 2 DETAIL
NOT TO SCALE

NOTE:

1. DETAILS MAY ALSO BE USED FOR OTHER CONCRETE OUTSIDE OF CCT SCOPE. NOTIFY ENGINEER OF ANY OTHER AREAS OF CONCRETE WALL DELAMINATION.

PARTIAL PLAN OR ELEVATION

SECTION 1-1

SECTION 1-1

EXTENSIVE CONCRETE REPAIR (INTIALLY EXPOSED REINFORCING)

3 CONCRETE REPAIR TYPE 3 DETAIL
NOT TO SCALE

STRUCTURAL CRACKS SHALL USE EPOXY BINDER.
NON-STRUCTURAL CRACKS SHALL USE POLYURETHANE GROUT.

CONCRETE CRACK REPAIR

4 CONCRETE REPAIR TYPE 4 DETAIL
NOT TO SCALE

NOTES:

1. ENLARGE CRACK AT CONCRETE SURFACE AS SHOWN AND APPLY JOINT SEALANT.
2. WIDEN CRACK 1/16" MINIMUM EACH SIDE OF THE CRACK CENTERLINE.
3. SEE SPECIFICATIONS FOR ADDITIONAL REQUIREMENTS. APPLY EPOXY INJECTION AS PER SPECS.

CONCRETE CRACK REPAIR

5 CONCRETE REPAIR TYPE 5 DETAIL
NOT TO SCALE

BID SET

SUBMITTAL DATE: 10/2026

GRAPHIC SCALES CHECK BEFORE USE

IF SHEET IS LESS THAN 22" X 34" IT IS A REDUCED PRINT. SCALE ACCORDINGLY

NO.	DATE	REVISIONS/DESCRIPTION	APPR'D.

DESIGNED BY: JR
CHECKED BY: JJ
DESIGN LEAD: JESSE JAECKEL, P.E.
PROJECT MANAGER: FRANK VISINGARDI JR., P.E.
DRAWN BY: AA

ACCOUNTABLE MANAGER: STELLA UWAECHIE
PORTFOLIO MANAGER: ANDREW NG, P.E.
EXECUTIVE DIRECTOR: KENNETH E. MORIARTY, P.E.

"WARNING–IT IS A VIOLATION, OF THE NEW YORK STATE EDUCATION LAW, SECTION, 7209.2, FOR ANY PERSON, UNLESS (S)HE IS ACTING UNDER THE DIRECTION OF A LICENSED PROFESSIONAL ENGINEER, TO ALTER THIS DOCUMENT IN ANY WAY. IF ALTERED, THE ALTERING PERSON SHALL COMPLY WITH THE REQUIREMENTS OF NEW YORK EDUCATION, LAW, SECTION, 7209.2."

NEW YORK CITY ENVIRONMENTAL PROTECTION
BUREAU OF ENGINEERING DESIGN & CONSTRUCTION
96-05 HORACE HARDING EXPRESSWAY 5th FLOOR
CORONA, NEW YORK 11368
www.nyc.gov/dep

CAPITAL PROJECT WP-282
STATEN ISLAND, NY, OAKWOOD BEACH WRRF
CONTRACT OB-144A
CONCRETE REPAIR DETAILS

DATE: OCTOBER 2026
SHEET NO: 24 OF 74
DRAWING NO. S-006.00

All inquiries regarding this drawing(s) or project should be made to NYC Environmental Protection, Bureau of Engineering Design and Construction.

9/29/2026 2:52:34 PM Autodesk Docs://10151452_OB-144A_Oakwood_Beach_Chlorination_Improve_2023/S_HDR002_OB_CCT.rvt

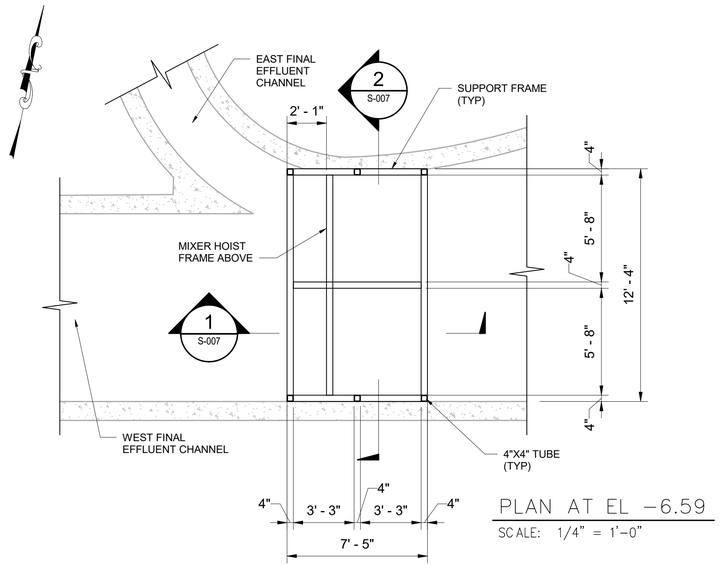

PLAN AT EL -6.59

SCALE: 1/4" = 1'-0"

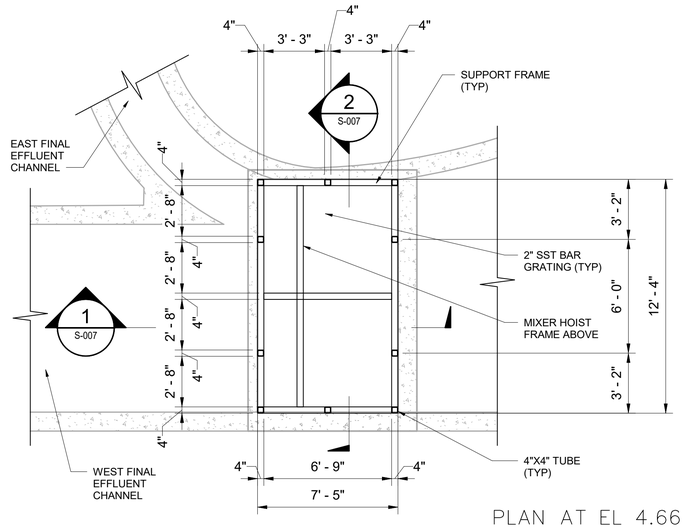

PLAN AT EL 4.66

SCALE: 1/4" = 1'-0"

NOTE:

1. REFER TO PROCESS FOR DEMOLITION OF EXISTING CONCRETE AT THIS LEVEL.

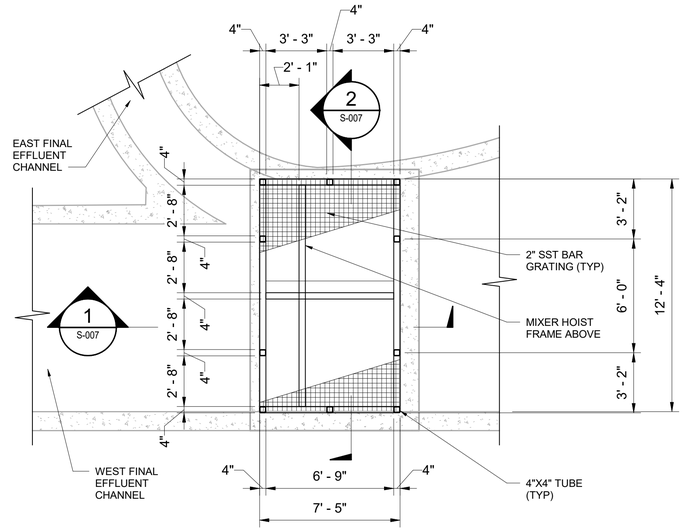

PLAN AT EL 10.11

SCALE: 1/4" = 1'-0"

1 S-007 SECTION

NOT TO SCALE

2 S-007 SECTION

NOT TO SCALE

GENERAL NOTES:

1. ALL TUBES ARE 4"X4". FINAL DESIGN BY CONTRACTORS ENGINEER.
2. ALL TUBE WELDS ARE 1/4". AFTER WELDING APPLY GALVANIZTION PAINT.
3. BOLTS ON OUTSIDE EDGE OF EL 10.11 OF FRAME ARE PRE-INSTALLED.
4. ALL MIXER & DIFFUSER FRAME COMPONENTS SHALL BE 316 STAINLESS STEEL.
5. DURING FABRICATION OF MIXER AND DIFFUSER FRAME, ONLY STAINLESS STEEL BRUSHES SHOULD BE USED TO CLEAN THE WELDS.
6. THE EXISTING OPENING DIMENSIONS SHALL BE FIELD VERIFIED. FRAME SHALL BE 1/4" LESS THAN EXISTING OPENING ON ALL SIDES.
7. FINAL SUPPORT FRAME, MIXER HOIST FRAME, AND ASSOCIATED CONNECTIONS/ANCHORAGE SHALL BE COMPLETED BY MIXER MANUFACTURER. COORDINATE FINAL DESIGN AGAINST PROCESS MECHANICAL DRAWINGS.
8. CONTRACTOR SHALL FIELD VERIFY CONDITION OF THE EXISTING DOSING CHAMBER. NOTIFY ENGINEER OF ANY DELAMINATIONS.
9. COORDINATE EQUIPMENT LOCATIONS WITH PROCESS MECHANICAL DRAWINGS.

1/2"=1'-0" 0 1 2 4 FT.

1/4"=1'-0" 1 4 8 FT.

BID SET

SUBMITTAL DATE: 10/2026

GRAPHIC SCALES CHECK BEFORE USE

IF SHEET IS LESS THAN 22" X 34" IT IS A REDUCED PRINT. SCALE ACCORDINGLY

NO.	DATE	REVISIONS/DESCRIPTION	APPR'D.

DESIGNED BY: JR
CHECKED BY: JJ
DESIGN LEAD: JESSE JAECKEL, P.E.
PROJECT MANAGER: FRANK VISINGARDI JR., P.E.
DRAWN BY: AA

STATE OF NEW YORK · JESSE RAY JAECKEL · 092709 · LICENSED PROFESSIONAL ENGINEER

Environmental Protection

ACCOUNTABLE MANAGER
STELLA UWAECHIE
PORTFOLIO MANAGER
ANDREW NG, P.E.
EXECUTIVE DIRECTOR
KENNETH E. MORIARTY, P.E.

"WARNING–IT IS A VIOLATION, OF THE NEW YORK STATE EDUCATION LAW, SECTION, 7209.2, FOR ANY PERSON, UNLESS (S)HE IS ACTING UNDER THE DIRECTION OF A LICENSED PROFESSIONAL ENGINEER, TO ALTER THIS DOCUMENT IN ANY WAY. IF ALTERED, THE ALTERING PERSON SHALL COMPLY WITH THE REQUIREMENTS OF NEW YORK EDUCATION, LAW, SECTION, 7209.2."

NEW YORK CITY ENVIRONMENTAL PROTECTION
BUREAU OF ENGINEERING DESIGN & CONSTRUCTION
96-05 HORACE HARDING EXPRESSWAY 5th FLOOR
CORONA, NEW YORK 11368
www.nyc.gov/dep

CAPITAL PROJECT WP-282
STATEN ISLAND, NY, OAKWOOD BEACH WRRF
CONTRACT OB-144A
MIXER SUPPORT PLANS AND DETAILS

DATE: OCTOBER 2026
SHEET NO: 25 OF 74
DRAWING NO. S-007.00

All inquiries regarding this drawing(s) or project should be made to NYC Environmental Protection, Bureau of Engineering Design and Construction.

9/29/2026 2:52:34 PM Autodesk Docs://10151452_OB-144A_Oakwood_Beach_Chlorination_Improve_2023/S_HDR002_OB_CCT.rvt

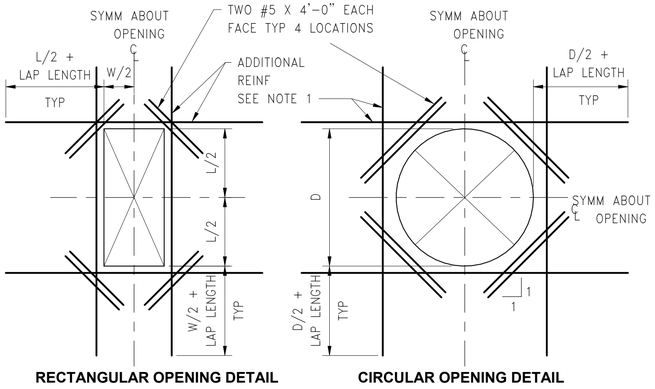

RECTANGULAR OPENING DETAIL **CIRCULAR OPENING DETAIL**

NOTES:

1. PROVIDE ADDITIONAL REINFORCING THE SAME SIZE AS DISCONTINUOUS REINFORCEMENT AT OPENING. QUANTITY OF REINFORCING IN EACH DIRECTION SHALL BE EQUAL TO OR ONE GREATER THAN THE NUMBER OF DISCONTINUOUS BARS. PLACE 1/2 OF ADDITIONAL REINFORCING BARS EACH SIDE OF OPENING, PLACE ADDITIONAL REINFORCEMENT AT 3" OC (TYPICAL BOTH DIRECTIONS AND ALL LAYERS OF REINFORCEMENT). START FIRST BAR 2" CLEAR TO OPENING.
2. EXTEND ADDITIONAL REINFORCING BEYOND EDGE OF OPENING AS SHOWN ABOVE. ADDITIONAL BARS MAY TERMINATE AT THE END OF THE WALL WITH A STANDARD HOOK WHERE THE LENGTH OF THE WALL WILL NOT PERMIT BARS TO EXTEND AS SHOWN ABOVE.
3. TYPICAL WALL OR SLAB REINFORCING NOT SHOWN FOR CLARITY. TERMINATE TYPICAL REINFORCING 2" CLEAR TO OPENING.
4. OPENINGS 12" OR LESS IN SLABS AND WALLS, NO EXTRA REBARS ARE REQUIRED UNLESS SHOWN OTHERWISE. TYPICAL REINFORCING SHALL BE RESPACED (NOT CUT) TO ALLOW FOR OPENINGS TO BE MADE.
5. UNLESS SHOWN OTHERWISE ON DRAWINGS, PROVIDE EXTRA REINFORCING AROUND OPENINGS AS SHOWN AND INDICATED ABOVE.
6. PROVIDE ADDITIONAL DOWELS PER NOTE 1 ABOVE FOR ALL OPENINGS NEAR THE FLOOR SLAB, BASE SLAB, OR CORNERS.

1 EXTRA REINFORCING AROUND OPENINGS DETAIL
NOT TO SCALE

MINIMUM LAP SPLICE LENGTHS f'c = 4000 psi					
BAR	* MIN BAR SPACING	LAPS FOR BARS SPACED GREATER THAN MIN BAR SPACING		LAPS FOR BARS SPACED CLOSER THAN MIN BAR SPACING	
		VERTICAL	OTHER	VERTICAL	OTHER
#3	3"	1'-4"	1'-6"	1'-4"	1'-6"
#4	3"	1'-7"	2'-0"	1'-8"	2'-2"
#5	3"	1'-11"	2'-6"	2'-7"	3'-4"
#6	4"	2'-4"	3'-0"	3'-8"	4'-9"
#7	4"	3'-6"	4'-6"	4'-11"	6'-5"
#8	4"	4'-7"	5'-11"	6'-6"	8'-6"
#9	4 1/2"	5'-9"	7'-6"	8'-3"	10'-9"
#10	5"	7'-4"	9'-6"	10'-6"	13'-7"
#11	5 5/8"	9'-0"	11'-8"	12'-10"	16'-8"

NOTES:

1. ALL REBAR SPLICE LENGTHS SHALL BE AS SHOWN UNDER HEADING "VERTICAL" EXCEPT IF SPLICED BARS ARE HORIZONTAL BARS WITH 12" OR MORE CONCRETE BELOW. THEN SPLICE LENGTH SHALL BE AS SHOWN UNDER HEADING "OTHER".
2. *AT SPLICES THE BAR SPACING IS THE CENTER TO CENTER DISTANCE BETWEEN ADJACENT REBAR.
3. ALL SPLICES SHALL BE CONTACT SPLICES AND WIRED TOGETHER.
4. NO WELDED OR MECH SPLICES ARE PERMITTED UNLESS INDICATED OTHERWISE.
5. UNLESS OTHERWISE SHOWN, SPLICES FOR BOTTOM REINF BARS IN BEAM AND SLABS SHALL BE CENTERED OVER THE SUPPORTS. SPLICES FOR TOP REINFORCING BARS SHALL BE LOCATED ON THE CENTERLINE OF SPAN.

2 CONCRETE REINFORCING LAP SPLICE SCHEDULE
NOT TO SCALE

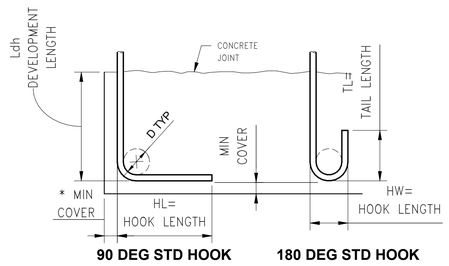

90 DEG STD HOOK **180 DEG STD HOOK**

BAR SIZE GRADE 60	HL	HW	TL	D	f'c=4.0
					Ldh*
#3	6"	3"	3"	2 1/4"	6"
#4	8"	4"	4 1/2"	3"	7"
#5	10"	5"	5"	3 3/4"	9"
#6	1'-0"	6"	6"	4 1/2"	10"
#7	1'-2"	7"	7"	5 1/4"	12"
#8	1'-4"	8"	8"	6"	14"
#9	1'-7"	11 3/4"	10 1/2"	9 1/2"	15"
#10	1'-10"	1'-1 1/4"	11 1/2"	10 3/4"	17"
#11	2'-0"	1'-2 3/4"	1'-1"	12"	19"

* COMPLYING WITH MINIMUM COVER REQUIREMENTS OF ACI 318, 12.5.3. OTHERWISE Ldh MUST BE RE-CALCULATED.

3 REINFORCING HOOK SCHEDULE
NOT TO SCALE

NOTES:

1. GRATING SIZE PER CONTRACT DOCUMENTS.
2. ALL ENDS AND OPENINGS SHALL BE BANDED, SEE SPECIFICATION.
3. ATTACH GRATING TO ALL SUPPORT ANGLES WITH BOLTED CLIPS, SPACED AT 2'-0" MAX CENTERS.
4. PROVIDE DISSIMILAR MATERIAL PROTECTION FOR ALUMINUM IN CONTACT WITH CONCRETE PER SPECIFICATION.

ONLY TO BE USED AT CONT WALL ABOVE GRATING OR AT PRE-EXISTING CONCRETE CONSTRUCTION

4 STEEL GRATING CONNECTION
NOT TO SCALE

BID SET

SUBMITTAL DATE: 10/2026

GRAPHIC SCALES CHECK BEFORE USE

IF SHEET IS LESS THAN 22" X 34" IT IS A REDUCED PRINT. SCALE ACCORDINGLY

NO.	DATE	REVISIONS/DESCRIPTION	APPR'D.

DESIGNED BY: JR
DRAWN BY: AA
CHECKED BY: JJ
DESIGN LEAD: JESSE JAECKEL, P.E.
PROJECT MANAGER: FRANK VISINGARDI JR., P.E.

ACCOUNTABLE MANAGER: STELLA UWAECHIE
PORTFOLIO MANAGER: ANDREW NG, P.E.
EXECUTIVE DIRECTOR: KENNETH E. MORIARTY, P.E.

"WARNING-IT IS A VIOLATION, OF THE NEW YORK STATE EDUCATION LAW, SECTION, 7209.2, FOR ANY PERSON, UNLESS (S)HE IS ACTING UNDER THE DIRECTION OF A LICENSED PROFESSIONAL ENGINEER, TO ALTER THIS DOCUMENT IN ANY WAY. IF ALTERED, THE ALTERING PERSON SHALL COMPLY WITH THE REQUIREMENTS OF NEW YORK EDUCATION, LAW, SECTION, 7209.2."

NEW YORK CITY ENVIRONMENTAL PROTECTION
BUREAU OF ENGINEERING DESIGN & CONSTRUCTION
96-05 HORACE HARDING EXPRESSWAY 5th FLOOR
CORONA, NEW YORK 11368
www.nyc.gov/dep

CAPITAL PROJECT WP-282
STATEN ISLAND, NY, OAKWOOD BEACH WRRF
CONTRACT OB-144A
TYPICAL CONCRETE DETAILS

DATE: OCTOBER 2026
SHEET NO: 26 OF 74
DRAWING NO. S-008.00

All inquiries regarding this drawing(s) or project should be made to NYC Environmental Protection, Bureau of Engineering Design and Construction.

Autodesk Docs://10151452_OB-144A_Oakwood_Beach_Chlorination_Improve_2023/S_HDR002_OB_CCT.rvt
9/29/2026 2:52:34 PM

ABBREVIATIONS

APPROX	APPROXIMATE
ATM	ATMOSPHERE
BLDG	BUILDING
CB	CATCH BASIN
CCT	CHLORINE CONTACT TANK
℄	CENTERLINE
CONC	CONCRETE
DIA	DIAMETER
DI/DIP	DUCTILE IRON / DUCTILE IRON PIPE
EA	EACH
EL	ELEVATION
EXIST	EXISTING
FED STD	FEDERAL STANDARD
FF	FIRST FLOOR / FINISHED FLOOR
FIN	FINISHED
FL	FLOOR
FRP	FIBER REINFORCED PLASTIC
GAL	GALLON
H	HEIGHT
L	LENGTH
LS	LANDSIDE
MECH	MECHANICAL
MIN	MINIMUM
NC	NORMALLY CLOSED
NO	NUMBER / NORMALLY OPEN
NPT	NATIONAL PIPE THREAD
NTS	NOT TO SCALE
OC	ON CENTER
OD	OUTER DIAMETER
PL	PLATE
PVC	POLYVINYL CHLORIDE PIPE
RAS	RETURN ACTIVATED SLUDGE
RPZ	REDUCED PRESSURE ZONE
RS	RETURN SLUDGE
SS	STAINLESS STEEL / SEASIDE
TK	TANK
THK	THICK
TOC	TOP OF CONCRETE
TOG	TOP OF GRATING
TRC	TOTAL RESIDUAL CHLORINE
TYP	TYPICAL
W	WIDTH
WAS	WASTE ACTIVATED SLUDGE
WP	WORKING POINT
W/	WITH
►	FLOW DIRECTION

GENERAL NOTES

1. SCREENING OR SHADING OF WORK IS USED TO INDICATE EXISTING COMPONENTS OR TO DE-EMPHASIZE PROPOSED IMPROVEMENTS TO HIGHLIGHT SELECTED DISCIPLINE WORK. REFER TO CONTEXT OF EACH SHEET FOR USAGE.

2. CONTRACTOR TO INSTALL EXPANSION FITTINGS CONSISTENT WITH EXISTING EXPANSION JOINTS LOCATED AT THE FOLLOWING LOCATIONS, BUT NOT LIMITED TO CCTS, METER BUILDING, AND SURROUNDING AREAS.

3. PROVIDE AUTOMATIC AIR VALVE WITH AN ISOLATION BALL VALVE AT ALL HIGH POINTS.

4. LOCATIONS, ELEVATIONS, AND DIMENSIONS OF EXISTING STRUCTURES, UTILITIES, AND OTHER FEATURES ARE SHOWN ACCORDING TO THE BEST INFORMATION AVAILABLE AT THE TIME OF PREPARATION OF THESE PLANS. THE LOCATIONS, ELEVATIONS, AND DIMENSIONS OF ALL EXISTING UTILITIES, STRUCTURES, AND FEATURES AFFECTING THIS WORK SHALL BE VERIFIED BY THE CONTRACTOR PRIOR TO CONSTRUCTION.

5. ALL WORK PERFORMED SHALL COMPLY WITH THE REGULATIONS AND ORDINANCES OF THE VARIOUS AUTHORITIES HAVING JURISDICTION OVER THE WORK.

6. IT IS THE RESPONSIBILITY OF THE CONTRACTOR TO COMPLY WITH AND ENFORCE ALL APPLICABLE SAFETY REGULATIONS.

7. ANY DEVIATION OR CHANGE IN DESIGN SHALL NOT BE MADE WITHOUT WRITTEN APPROVAL OF THE ENGINEER OR OWNER. ANY WORK INSTALLED WITHOUT PRIOR APPROVAL OF THE ENGINEER OR OWNER OR FOUND TO BE DEFECTIVE OR OF POOR QUALITY SHALL BE REPLACED BY THE CONTRACTOR AT THEIR OWN EXPENSE.

8. THE CONTRACTOR SHALL MAINTAIN, AT THE JOB SITE, ONE SET OF FULL-SIZE CONTRACT DRAWINGS MARKED TO SHOW ANY DEVIATIONS THAT HAVE BEEN MADE FROM THE CONTRACT DRAWINGS, INCLUDING BURIED OR CONCEALED CONSTRUCTION AND UTILITY FEATURES REVEALED DURING THE COURSE OF CONSTRUCTION. THESE DRAWINGS SHALL BE AVAILABLE FOR REVIEW BY THE ENGINEER AT ALL TIMES. UPON COMPLETION OF THE INSTALLATION OF NEW WORK THE CONTRACTOR SHALL TURN OVER TO THE OWNER AND ENGINEER ONE (1) SET OF PRINTS INCLUDING ALL APPROVED FIELD CHANGES AND DESIGN DEVIATIONS PRIOR TO REQUEST FOR FINAL PAYMENT OF OWNER.

9. CONTRACTOR SHALL FIELD VERIFY DIMENSIONS PRIOR TO ORDERING EQUIPMENT AND MATERIALS.

10. ALL DIMENSIONS SHALL BE VERIFIED IN FIELD.
11. EACH CCT SHUTDOWN SHALL BE COORDINATED WITH PLANT OPERATIONS.
12. ONLY ONE CCT SHALL BE SHUT DOWN AT A TIME.
13. SEASONAL LIMITATIONS ON CCT SHUTDOWNS:
    - 13.1. FROM APRIL 1 THROUGH NOVEMBER 30, EACH CCT SHUTDOWN SHALL NOT EXCEED 60 DAYS.
    - 13.2. FROM DECEMBER 1 THROUGH MARCH 31, EACH CCT SHUTDOWN SHALL NOT EXCEED 90 DAYS.

VALVE SCHEDULE

ITEM NO.	VALVE ID	GROUP LEVEL	SIZE (IN)	VALVE TYPE	LOCATION	DESCRIPTION
1	05-00.50-001	DISINFECTION, ADVANCED TREATMENT	0.5	Y-STRAINER	WEATHER CONTROLLED ENCLOSURE	FROM LANDSIDE CCT COMMON INFLUENT TO INFLUENT TRC
2	05-00.50-002	DISINFECTION, ADVANCED TREATMENT	0.5	BALL VALVE	WEATHER CONTROLLED ENCLOSURE	FROM LANDSIDE CCT COMMON INFLUENT TO INFLUENT TRC
3	05-00.50-003	DISINFECTION, ADVANCED TREATMENT	0.5	BALL VALVE	WEATHER CONTROLLED ENCLOSURE	FROM LANDSIDE CCT COMMON INFLUENT TO INFLUENT TRC, PI-4312BO
4	05-01.50-001	DISINFECTION, ADVANCED TREATMENT	1.5	CHECK VALVE	OUTDOORS, BETWEEN CCT AND ENCLOSURE	FROM LANDSIDE CCT COMMON INFLUENT DRAIN TO CCT COMMON INFLUENT CONDUIT
5	05-01.50-002	DISINFECTION, ADVANCED TREATMENT	1.5	BALL VALVE	OUTDOORS, BETWEEN CCT AND ENCLOSURE	FROM LANDSIDE CCT COMMON INFLUENT DRAIN TO CCT COMMON INFLUENT CONDUIT
6	05-00.50-004	DISINFECTION, ADVANCED TREATMENT	0.5	Y-STRAINER	WEATHER CONTROLLED ENCLOSURE	FROM SEASIDE CCT COMMON EFFLUENT TO EFFLUENT TRC
7	05-00.50-005	DISINFECTION, ADVANCED TREATMENT	0.5	BALL VALVE	WEATHER CONTROLLED ENCLOSURE	FROM SEASIDE CCT COMMON EFFLUENT TO EFFLUENT TRC
8	05-00.50-006	DISINFECTION, ADVANCED TREATMENT	0.5	BALL VALVE	WEATHER CONTROLLED ENCLOSURE	FROM SEASIDE CCT COMMON EFFLUENT TO EFFLUENT TRC, PI-4312BO
9	05-01.50-003	DISINFECTION, ADVANCED TREATMENT	1.5	CHECK VALVE	OUTDOORS, BETWEEN CCT AND ENCLOSURE	FROM SEASIDE CCT COMMON EFFLUENT DRAIN TO CCT COMMON EFFLUENT CONDUIT
10	05-01.50-004	DISINFECTION, ADVANCED TREATMENT	1.5	BALL VALVE	OUTDOORS, BETWEEN CCT AND ENCLOSURE	FROM SEASIDE CCT COMMON EFFLUENT DRAIN TO CCT COMMON EFFLUENT CONDUIT
11	05-01.00-001	DISINFECTION, ADVANCED TREATMENT	1	BALL VALVE	EMERGENCY TANKS RETURN PUMPS	EMERGENCY TANKS RETURN PUMPS DISCHARGE
12	05-01.00-002	DISINFECTION, ADVANCED TREATMENT	1	AIR RELIEF VALVE	EMERGENCY TANKS RETURN PUMPS	EMERGENCY TANKS RETURN PUMPS DISCHARGE
13	OB1.05.01.004.AD01.01	DISINFECTION, ADVANCED TREATMENT	84x60	SLIDE GATE	CHLORINE CONTACT TANKS	SLIDE GATE #1, SEASIDE CCT, INFLUENT
14	OB1.05.01.004.AD01.02	DISINFECTION, ADVANCED TREATMENT	84x60	SLIDE GATE	CHLORINE CONTACT TANKS	SLIDE GATE #2, SEASIDE CCT, INFLUENT
15	OB1.05.01.004.AD01.03	DISINFECTION, ADVANCED TREATMENT	84x60	SLIDE GATE	CHLORINE CONTACT TANKS	SLIDE GATE #3, LANDSIDE CCT, INFLUENT
16	OB1.05.01.004.AD01.04	DISINFECTION, ADVANCED TREATMENT	84x60	SLIDE GATE	CHLORINE CONTACT TANKS	SLIDE GATE #4, LANDSIDE CCT, INFLUENT
17	OB1.14.01.004.AD01.01	WATER SYSTEMS	36x36	SLIDE GATE	CHLORINE CONTACT TANKS	SLIDE GATE #1, LANDSIDE CCT, INFLUENT, EFFLUENT WATER SYSTEM
18	OB1.14.01.273.AD01.01	WATER SYSTEMS	24	BUTTERFLY VALVE	CHLORINE CONTACT TANKS	BUTTERFLY VALVE #1, 24", SEASIDE CCT, INFLUENT, EFFLUENT WATER SYSTEM
19	OB1.05.53.019.AD01.01	DISINFECTION, ADVANCED TREATMENT	12	MUD VALVE	CHLORINE CONTACT TANKS	MUD VALVE #1, 12", SEASIDE CCT FOR TANK DRAIN
20	OB1.05.53.019.AD01.02	DISINFECTION, ADVANCED TREATMENT	12	MUD VALVE	CHLORINE CONTACT TANKS	MUD VALVE #2, 12", SEASIDE CCT FOR TANK DRAIN
21	OB1.05.53.019.AD01.03	DISINFECTION, ADVANCED TREATMENT	12	MUD VALVE	CHLORINE CONTACT TANKS	MUD VALVE #3, 12", SEASIDE CCT FOR TANK DRAIN
22	OB1.05.53.019.AD01.04	DISINFECTION, ADVANCED TREATMENT	12	MUD VALVE	CHLORINE CONTACT TANKS	MUD VALVE #4, 12", SEASIDE CCT FOR TANK DRAIN
23	OB1.05.53.019.AD01.05	DISINFECTION, ADVANCED TREATMENT	12	MUD VALVE	CHLORINE CONTACT TANKS	MUD VALVE #5, 12", LANDSIDE CCT FOR TANK DRAIN
24	OB1.05.53.019.AD01.06	DISINFECTION, ADVANCED TREATMENT	12	MUD VALVE	CHLORINE CONTACT TANKS	MUD VALVE #6, 12", LANDSIDE CCT FOR TANK DRAIN
25	OB1.05.53.019.AD01.07	DISINFECTION, ADVANCED TREATMENT	12	MUD VALVE	CHLORINE CONTACT TANKS	MUD VALVE #7, 12", LANDSIDE CCT FOR TANK DRAIN

BID SET

SUBMITTAL DATE: 10/2026

GRAPHIC SCALES CHECK BEFORE USE

IF SHEET IS LESS THAN 22" X 34" IT IS A REDUCED PRINT. SCALE ACCORDINGLY

NO.	DATE	REVISIONS/DESCRIPTION	APPR'D.

DESIGNED BY: KH
DRAWN BY: ZA
CHECKED BY: RH
DESIGN LEAD: KAUO HSIEH, P.E.
PROJECT MANAGER: FRANK VISINGARDI, JR., P.E.

STATE OF NEW YORK · FRANK VISINGARDI · 072716 · LICENSED PROFESSIONAL ENGINEER

Environmental Protection

ACCOUNTABLE MANAGER: STELLA UWAECHIE
PORTFOLIO MANAGER: ANDREW NG, P.E.
EXECUTIVE DIRECTOR: KENNETH E. MORIARTY, P.E.

"WARNING-IT IS A VIOLATION, OF THE NEW YORK STATE EDUCATION LAW, SECTION, 7209.2, FOR ANY PERSON, UNLESS (S)HE IS ACTING UNDER THE DIRECTION OF A LICENSED PROFESSIONAL ENGINEER, TO ALTER THIS DOCUMENT IN ANY WAY. IF ALTERED, THE ALTERING PERSON SHALL COMPLY WITH THE REQUIREMENTS OF NEW YORK EDUCATION, LAW, SECTION, 7209.2."

NEW YORK CITY ENVIRONMENTAL PROTECTION
BUREAU OF ENGINEERING DESIGN & CONSTRUCTION
96-05 HORACE HARDING EXPRESSWAY 5th FLOOR
CORONA, NEW YORK 11368
www.nyc.gov/dep

CAPITAL PROJECT WP-282
STATEN ISLAND, NY, OAKWOOD BEACH WRRF
CONTRACT OB-144A

ABBREVIATIONS AND GENERAL NOTES

DATE: OCTOBER 2026
SHEET NO: 27 OF 74
DRAWING NO. GM-001.00

All inquiries regarding this drawing(s) or project should be made to NYC Environmental Protection, Bureau of Engineering Design and Construction.

Last Saved By:ZALBER Last Date Saved:9/1/2026 11:46 AM Date & Time Plotted: 9/9/2026 10:39 AM
Paper Size Printed/Plotted: ANSI full bleed D (34.00 x 22.00 Inches) Plot Scale:0.997129 Plot Style Table: DEP_BEDC_22x34_ByWeight.ctb
Drawing File Name & Drive Location: C:\pwworking\east01\d4268698\GM-001.dwg

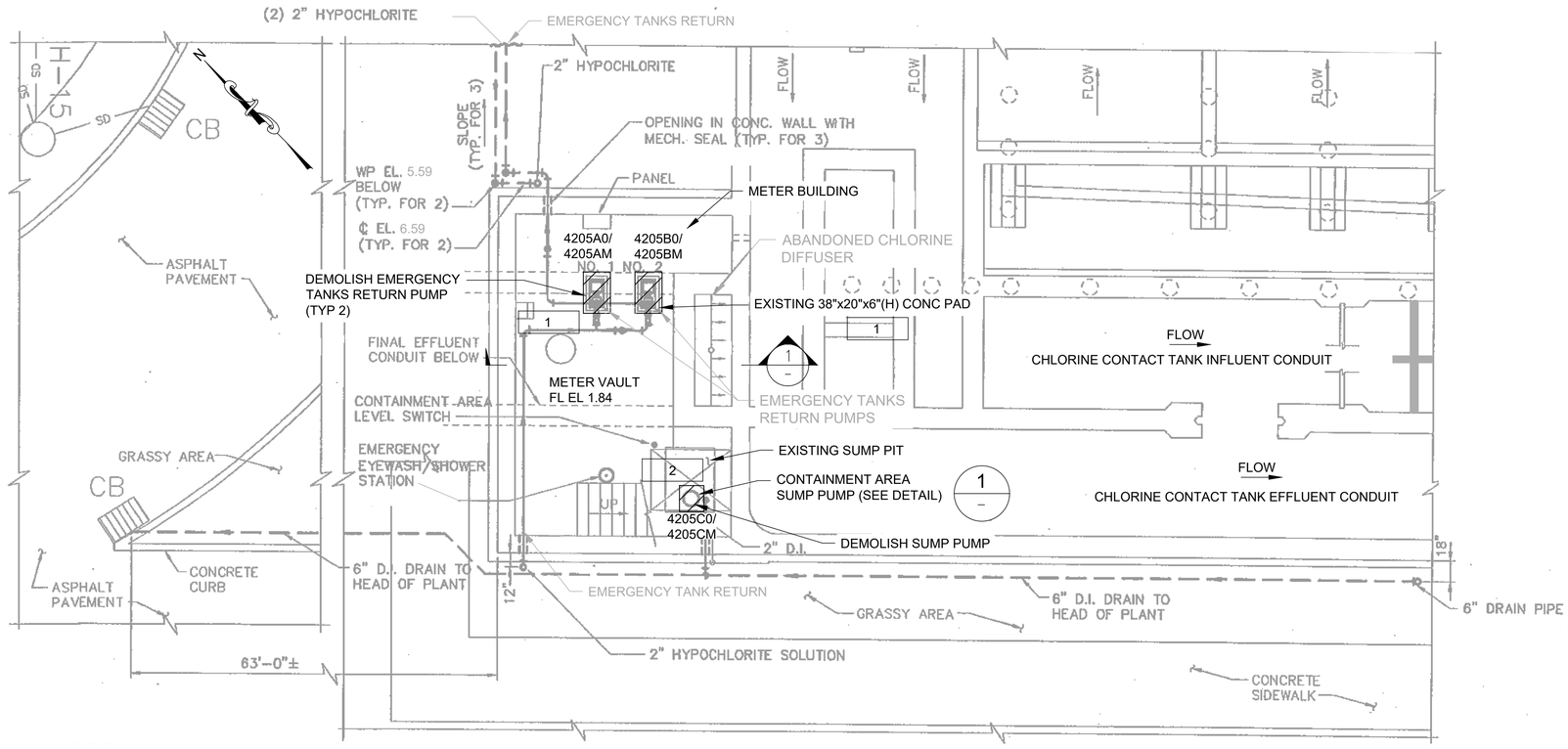

PLAN AT EL 1.84
NTS

KEY NOTES: #

1 CONTRACTOR TO DEMOLISH EMERGENCY TANKS RETURN PUMPS, REMOVE EXISTING PUMP BASE, GROUT, AND ANCHOR BOLTS. CLEAN AND RESURFACE CONCRETE PADS. SEE SPECIFICATIONS.

2 CONTRACTOR TO DEMOLISH SUMP PUMP, PARTIAL DISCHARGE PIPE, SUCTION PIPE, AND FOOT VALVE.

LEGEND:

TO BE REMOVED

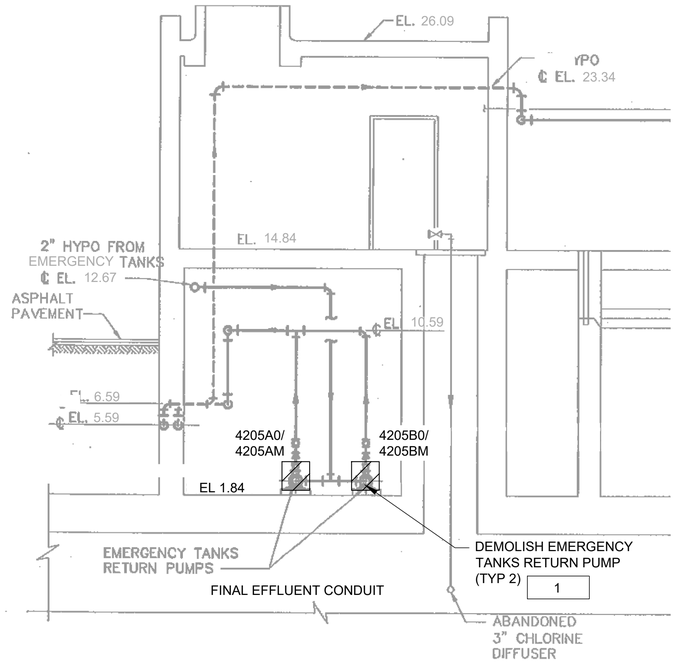

1 – SECTION
NTS

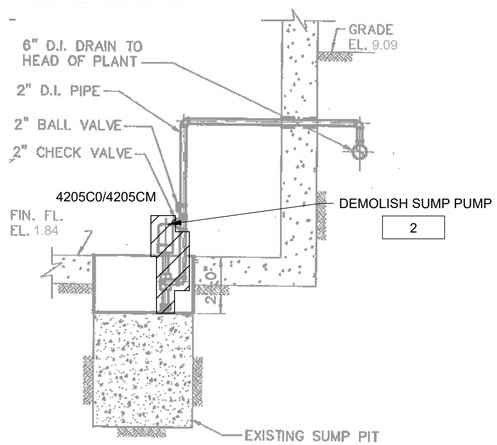

1 – DETAIL
NTS

BID SET

SUBMITTAL DATE: 10/2026

GRAPHIC SCALES CHECK BEFORE USE

IF SHEET IS LESS THAN 22" X 34" IT IS A REDUCED PRINT. SCALE ACCORDINGLY

NO.	DATE	REVISIONS/DESCRIPTION	APPR'D.

DESIGNED BY: KH
DRAWN BY: ZA
CHECKED BY: RH
DESIGN LEAD: KAUO HSIEH, P.E.
PROJECT MANAGER: FRANK VISINGARDI, JR., P.E.

STATE OF NEW YORK · FRANK VISINGARDI · 072715 · LICENSED PROFESSIONAL ENGINEER

Environmental Protection

ACCOUNTABLE MANAGER: STELLA UWAECHIE
PORTFOLIO MANAGER: ANDREW NG, P.E.
EXECUTIVE DIRECTOR: KENNETH E. MORIARTY, P.E.

"WARNING-IT IS A VIOLATION, OF THE NEW YORK STATE EDUCATION LAW, SECTION, 7209.2, FOR ANY PERSON, UNLESS (S)HE IS ACTING UNDER THE DIRECTION OF A LICENSED PROFESSIONAL ENGINEER, TO ALTER THIS DOCUMENT IN ANY WAY. IF ALTERED, THE ALTERING PERSON SHALL COMPLY WITH THE REQUIREMENTS OF NEW YORK EDUCATION, LAW, SECTION, 7209.2."

NEW YORK CITY ENVIRONMENTAL PROTECTION
BUREAU OF ENGINEERING DESIGN & CONSTRUCTION
96-05 HORACE HARDING EXPRESSWAY 5th FLOOR
CORONA, NEW YORK 11368
www.nyc.gov/dep

CAPITAL PROJECT WP-282
STATEN ISLAND, NY, OAKWOOD BEACH WRRF
CONTRACT OB-144A

METER BUILDING DEMOLITION
PLAN, SECTION AND DETAIL

DATE: OCTOBER 2026
SHEET NO: 28 OF 74
DRAWING NO. DM-001.00

Last Saved By: ZALBER Last Date Saved: 7/8/2026 9:12 AM Date & Time Plotted: 9/9/2026 10:41 AM
Paper Size Printed/Plotted: ANSI A (8.50 x 11.00 Inches) Plot Scale:0.386863' Plot Style Table: ----
Drawing File Name & Drive Location: C:\pwworking\east01\d4268698\DM-001.dwg

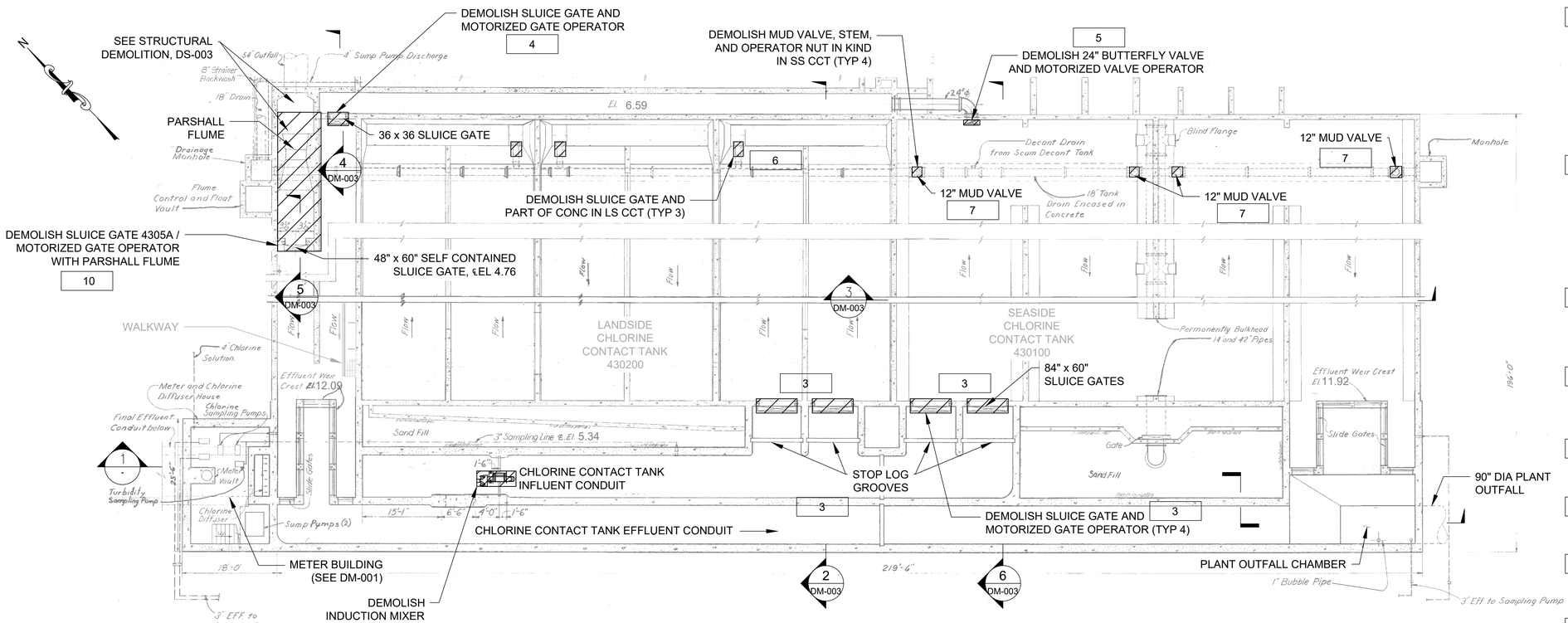

PLAN AT EL 1.84
NTS

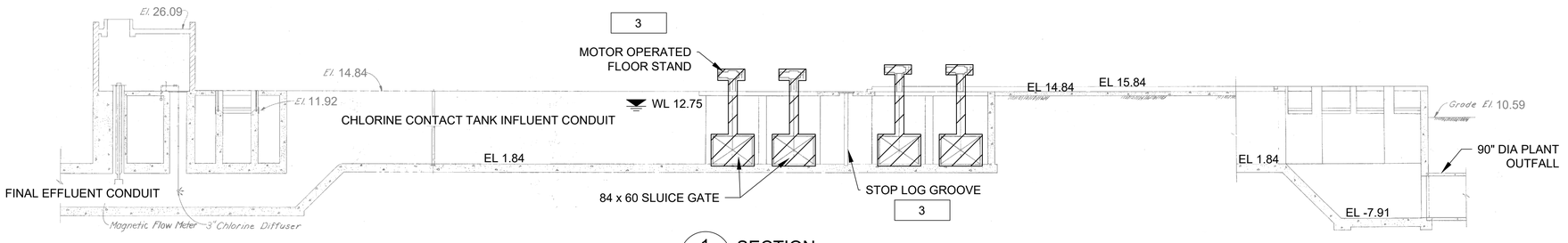

1 SECTION
NTS

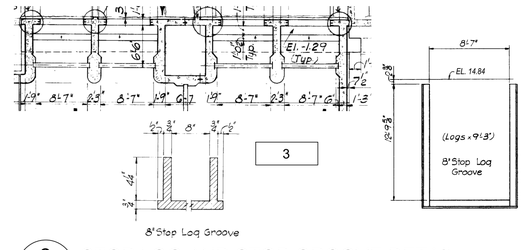

2 STOP LOG AND STOP GROOVE DETAIL
NTS

KEY NOTES: #

3	A. CONTRACTOR TO VERIFY CONDITIONS, DIMENSIONS, REPAIRS IF NEEDED, AND CLEAN STOP LOG GROOVES PRIOR TO INSTALLING THE STOP LOGS. B. CONTRACTOR TO DEMOLISH SLUICE GATE AND ASSOCIATED EQUIPMENT.CONTRACTOR TO RETURN ACTUATORS IN A STATE OF GOOD REPAIR TO DEP. C. CONTRACTOR TO REMOVE EMBEDDED SLUICE GATE THIMBLE AND REPAIR THE CONCRETE WALL AND FLOOR SURFACE.
4	A. CONTRACTOR TO ISOLATE THE SLUICE GATE AND HAVE CLEAN SPACE FOR GATE REMOVAL. B. CONTRACTOR TO DEMOLISH SLUICE GATE AND ASSOCIATED EQUIPMENT. TURN OVER NEWLY INSTALLED ELECTRICAL ACTUATOR TO DEP. C. CONTRACTOR TO REMOVE EMBEDDED SLUICE GATE THIMBLE AND REPAIR THE CONCRETE WALL AND FLOOR SURFACE.
5	A. CONTRACTOR TO ISOLATE THE BUTTERFLY VALVE AND HAVE CLEAN SPACE FOR VALVE REMOVAL. B. CONTRACTOR TO DEMOLISH BUTTERFLY VALVE AND ASSOCIATED EQUIPMENT.
6	CONTRACTOR TO DEMOLISH THE SLUICE GATE, PART OF THE CONCRETE, AND ASSOCIATED EQUIPMENT. SURFACE TO BE CLEANED FOLLOWING REMOVAL.
7	CONTRACTOR TO REMOVE THE MUD VALVE AND ASSOCIATED EQUIPMENT. EMBEDDED FLANGE TO REMAIN AND BE CLEANED. SURFACE TO BE CLEANED FOLLOWING REMOVAL.
8	CONTRACTOR TO REMOVE INDUCTION MIXER
9	CONTRACTOR TO PROVIDE TEMPORARY SODIUM HYPOCHLORITE DIFFUSER PIPING FOR DOSING. DIFFUSER PIPING TO TIE INTO EXISTING SODIUM HYPOCHLORITE FEED LINE DURING CONSTRUCTION. TEMPORARY FEED SYSTEM SHALL RECEIVE APPROVAL FROM ENGINEER AND PLANT PRIOR TO INSTALLATION.
10	DEMOLISH SLUICE GATE 4305A MOTORIZED GATE OPERATOR WITH PARSHALL FLUME.

LEGEND:

▨ TO BE REMOVED

BID SET

SUBMITTAL DATE: 10/2026

GRAPHIC SCALES CHECK BEFORE USE

IF SHEET IS LESS THAN 22" X 34" IT IS A REDUCED PRINT. SCALE ACCORDINGLY

NO.	DATE	REVISIONS/DESCRIPTION	APPR'D.

DESIGNED BY: KH
DRAWN BY: ZA
CHECKED BY: RH
DESIGN LEAD: KAUO HSIEH, P.E.
PROJECT MANAGER: FRANK VISINGARDI, JR., P.E.

ACCOUNTABLE MANAGER: STELLA UWAECHIE
PORTFOLIO MANAGER: ANDREW NG, P.E.
EXECUTIVE DIRECTOR: KENNETH E. MORIARTY, P.E.

"WARNING-IT IS A VIOLATION, OF THE NEW YORK STATE EDUCATION LAW, SECTION, 7209.2, FOR ANY PERSON, UNLESS (S)HE IS ACTING UNDER THE DIRECTION OF A LICENSED PROFESSIONAL ENGINEER, TO ALTER THIS DOCUMENT IN ANY WAY. IF ALTERED, THE ALTERING PERSON SHALL COMPLY WITH THE REQUIREMENTS OF NEW YORK EDUCATION, LAW, SECTION, 7209.2."

NEW YORK CITY ENVIRONMENTAL PROTECTION
BUREAU OF ENGINEERING DESIGN & CONSTRUCTION
96-05 HORACE HARDING EXPRESSWAY 5th FLOOR
CORONA, NEW YORK 11368
www.nyc.gov/dep

CAPITAL PROJECT WP-282
STATEN ISLAND, NY, OAKWOOD BEACH WRRF
CONTRACT OB-144A

CHLORINE CONTACT TANKS
DEMOLITION PLAN AND SECTION

DATE: OCTOBER 2026
SHEET NO: 29 OF 74
DRAWING NO. DM-002.00

Last Saved By: ZALBER Last Date Saved: 7/8/2026 9:13 AM Date & Time Plotted: 9/9/2026 10:42 AM
Paper Size Printed/Plotted: ANSI A (8.50 x 11.00 Inches) Plot Scale:0.386863 Plot Style Table: ----
Drawing File Name & Drive Location: C:\pwworking\east01\d4268698\DM-002.dwg

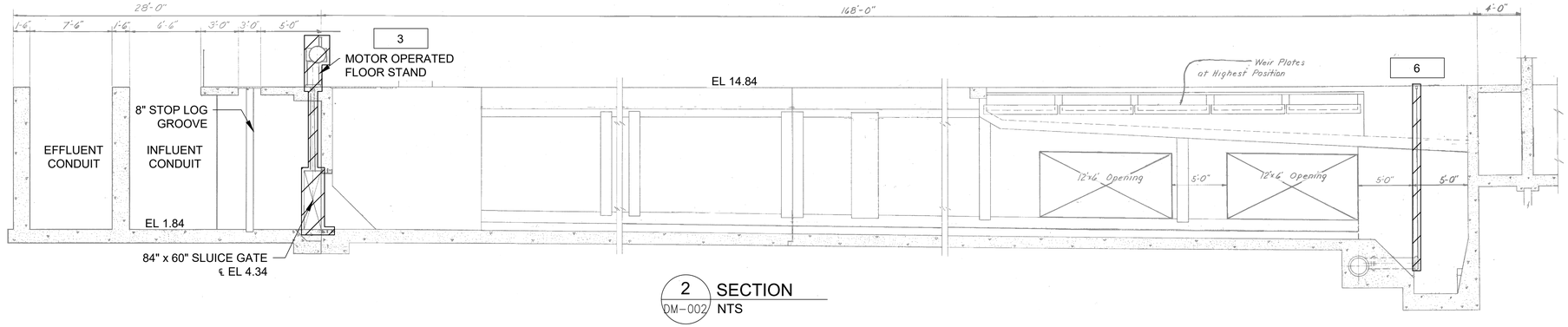

2 SECTION
DM-002 NTS

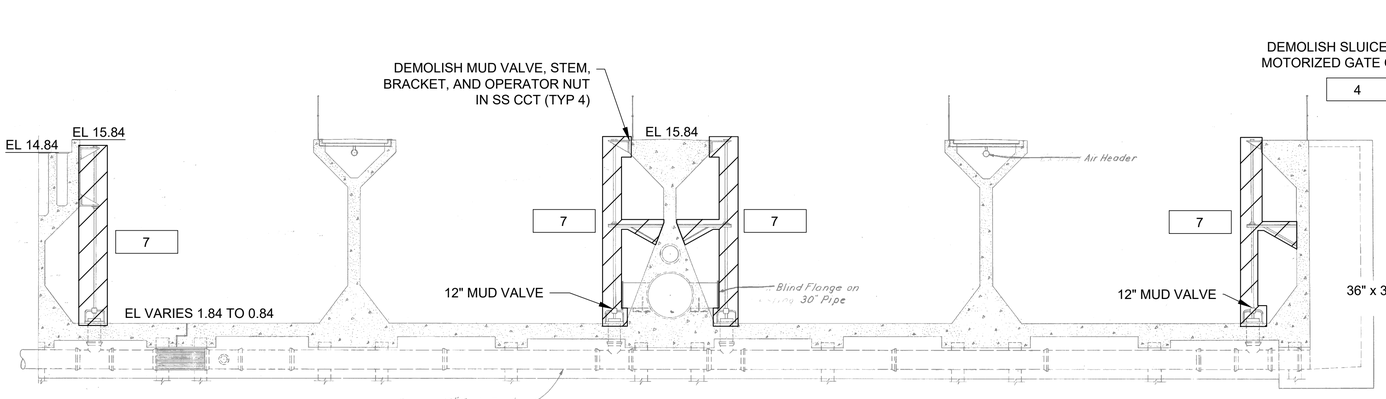

3 SECTION
DM-002 NTS

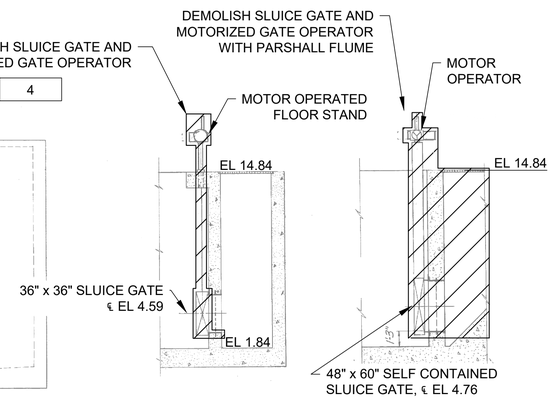

4 SECTION
DM-002 NTS

5 SECTION
DM-002 NTS

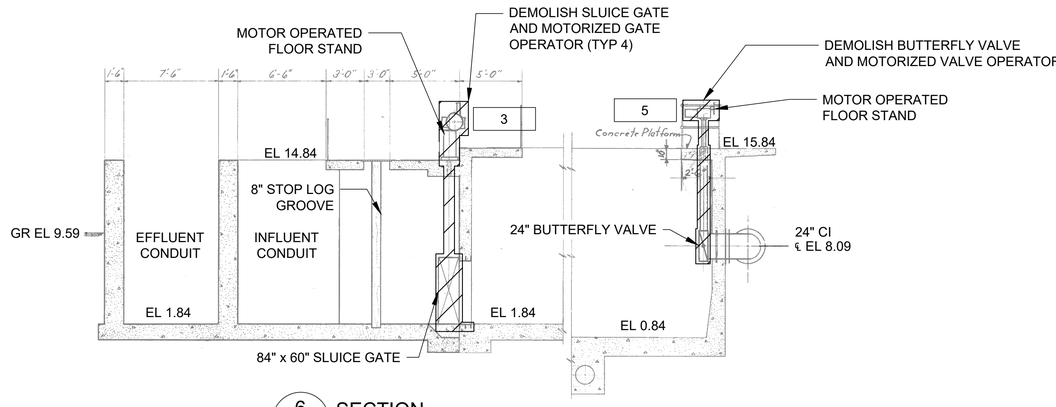

6 SECTION
DM-002 NTS

KEY NOTES: #

#	
3	A. CONTRACTOR TO VERIFY CONDITIONS, DIMENSIONS, REPAIRS IF NEEDED, AND CLEAN STOP LOG GROOVES PRIOR TO INSTALLING THE STOP LOGS. B. CONTRACTOR TO DEMOLISH SLUICE GATE AND ASSOCIATED EQUIPMENT.CONTRACTOR TO RETURN ACTUATORS IN A STATE OF GOOD REPAIR TO DEP. C. CONTRACTOR TO REMOVE EMBEDDED SLUICE GATE THIMBLE AND REPAIR THE CONCRETE WALL AND FLOOR SURFACE.
4	A. CONTRACTOR TO ISOLATE THE SLUICE GATE AND HAVE CLEAN SPACE FOR GATE REMOVAL. B. CONTRACTOR TO DEMOLISH SLUICE GATE AND ASSOCIATED EQUIPMENT. TURN OVER NEWLY INSTALLED ELECTRICAL ACTUATOR TO DEP. C. CONTRACTOR TO REMOVE EMBEDDED SLUICE GATE THIMBLE AND REPAIR THE CONCRETE WALL AND FLOOR SURFACE.
5	A. CONTRACTOR TO ISOLATE THE BUTTERFLY VALVE AND HAVE CLEAN SPACE FOR VALVE REMOVAL. B. CONTRACTOR TO DEMOLISH BUTTERFLY VALVE AND ASSOCIATED EQUIPMENT.
6	CONTRACTOR TO DEMOLISH THE SLUICE GATE, PART OF THE CONCRETE, AND ASSOCIATED EQUIPMENT. SURFACE TO BE CLEANED FOLLOWING REMOVAL.
7	CONTRACTOR TO REMOVE THE MUD VALVE AND ASSOCIATED EQUIPMENT. EMBEDDED FLANGE TO REMAIN AND BE CLEANED. SURFACE TO BE CLEANED FOLLOWING REMOVAL.

LEGEND:

TO BE REMOVED

BID SET

SUBMITTAL DATE: 10/2026

GRAPHIC SCALES CHECK BEFORE USE

IF SHEET IS LESS THAN 22" X 34" IT IS A REDUCED PRINT. SCALE ACCORDINGLY

NO.	DATE	REVISIONS/DESCRIPTION	APPR'D.

DESIGNED BY: KH
DRAWN BY: ZA
CHECKED BY: RH
DESIGN LEAD: KAUO HSIEH, P.E.
PROJECT MANAGER: FRANK VISINGARDI, JR., P.E.

STATE OF NEW YORK FRANK VISINGARDI JR. 072716 LICENSED PROFESSIONAL ENGINEER

Environmental Protection

ACCOUNTABLE MANAGER: STELLA UWAECHIE
PORTFOLIO MANAGER: ANDREW NG, P.E.
EXECUTIVE DIRECTOR: KENNETH E. MORIARTY, P.E.

"WARNING-IT IS A VIOLATION, OF THE NEW YORK STATE EDUCATION LAW, SECTION, 7209.2, FOR ANY PERSON, UNLESS (S)HE IS ACTING UNDER THE DIRECTION OF A LICENSED PROFESSIONAL ENGINEER, TO ALTER THIS DOCUMENT IN ANY WAY. IF ALTERED, THE ALTERING PERSON SHALL COMPLY WITH THE REQUIREMENTS OF NEW YORK EDUCATION, LAW, SECTION, 7209.2."

NEW YORK CITY ENVIRONMENTAL PROTECTION
BUREAU OF ENGINEERING DESIGN & CONSTRUCTION
96-05 HORACE HARDING EXPRESSWAY 5th FLOOR
CORONA, NEW YORK 11368
www.nyc.gov/dep

CAPITAL PROJECT WP-282
STATEN ISLAND, NY, OAKWOOD BEACH WRRF
CONTRACT OB-144A

CHLORINE CONTACT TANKS
DEMOLITION SECTIONS

DATE: OCTOBER 2026
SHEET NO: 30 OF 74
DRAWING NO. DM-003.00

Last Saved By:ZALBER Last Date Saved:9/9/2026 10:43 AM Date & Time Plotted: 9/9/2026 10:43 AM
Paper Size Printed/Plotted: ANSI A (8.50 x 11.00 Inches) Plot Scale:0.386863 Plot Style Table: ----
Drawing File Name & Drive Location: C:\pwworking\east01\d4268698\DM-003.dwg

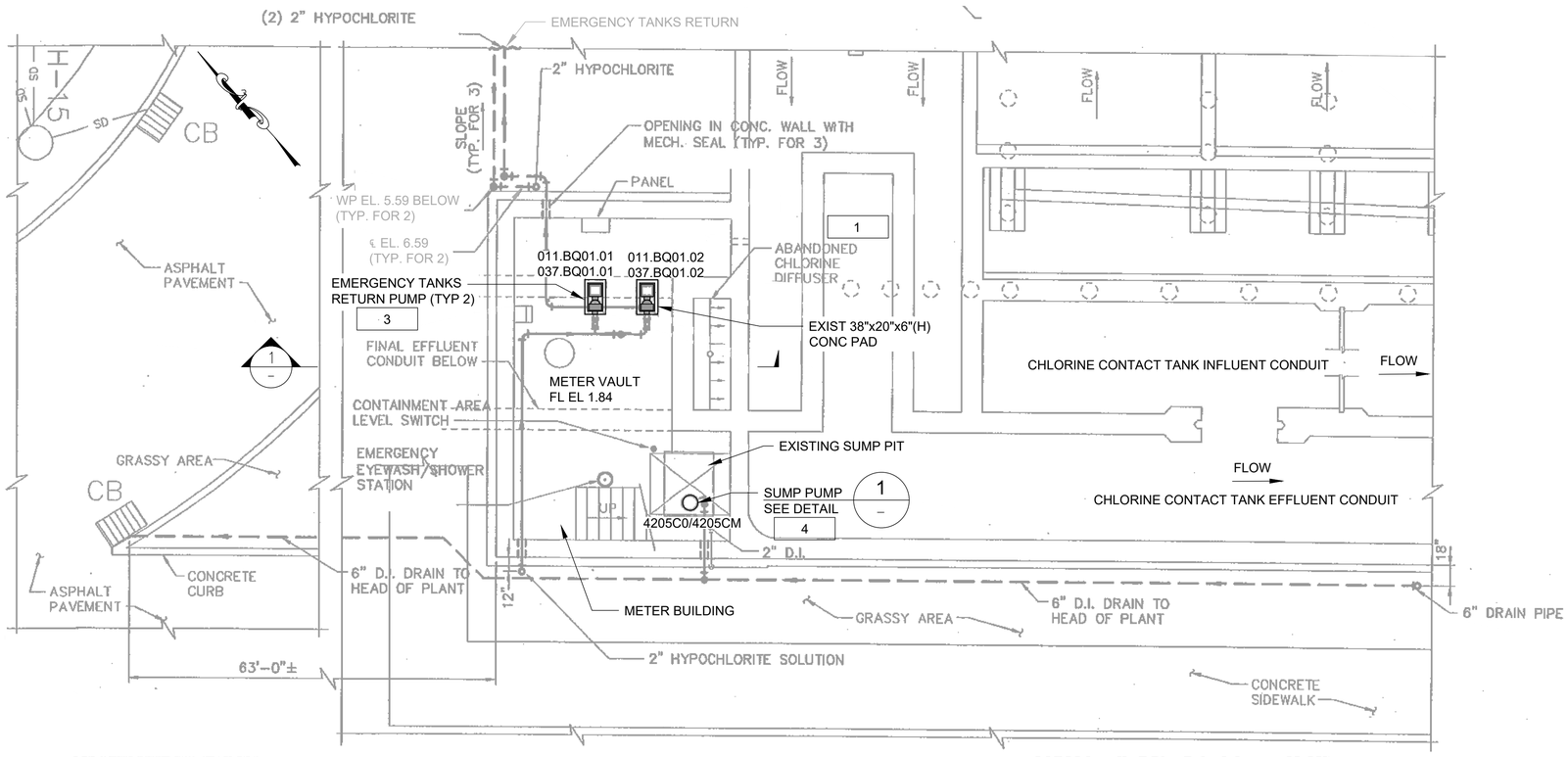

PLAN AT EL 1.84
NTS

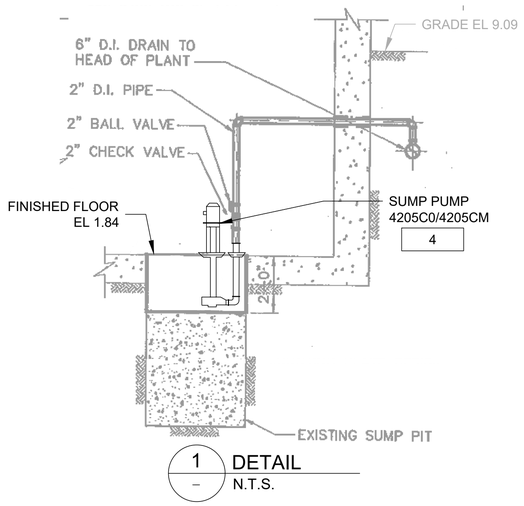

1 DETAIL
N.T.S.

NOTE:

1. ALL DIMENSIONS AND EQUIPMENT SIZES TO BE VERIFIED IN THE FIELD.

KEY NOTES: #

1	CONTRACTOR TO RE-COAT THE CONCRETE PAD.
2	PROVIDE PUMP IDENTIFICATION TAGS.
3	DEMOLISH AND REPLACE WITH NEW EMERGENCY TANKS RETURN PUMPS.
4	DEMOLISH AND REPLACE WITH NEW SUMP PUMP.

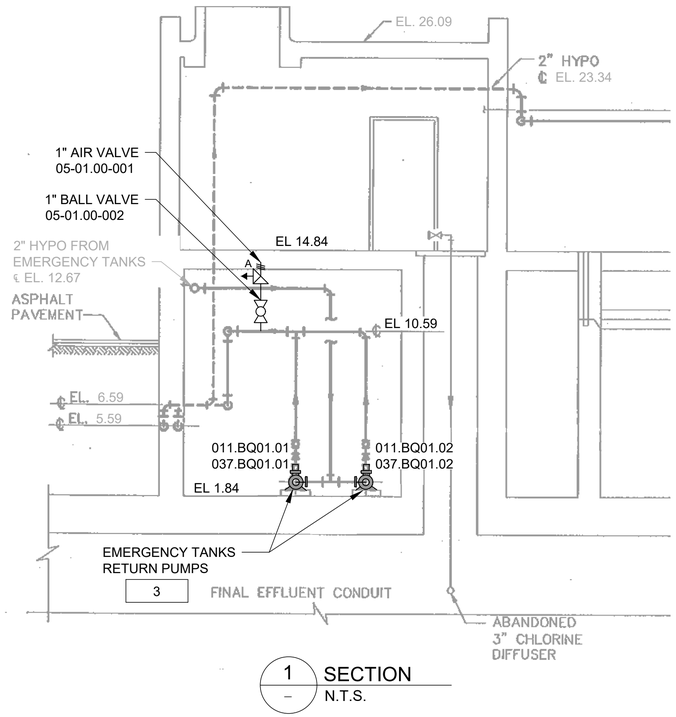

1 SECTION
N.T.S.

BID SET

SUBMITTAL DATE: 10/2026

GRAPHIC SCALES CHECK BEFORE USE

IF SHEET IS LESS THAN 22" X 34" IT IS A REDUCED PRINT. SCALE ACCORDINGLY

NO.	DATE	REVISIONS/DESCRIPTION	APPR'D.

DESIGNED BY: KH
DRAWN BY: ZA
CHECKED BY: RH
DESIGN LEAD: KAUO HSIEH, P.E.
PROJECT MANAGER: FRANK VISINGARDI, JR., P.E.

ACCOUNTABLE MANAGER: STELLA UWAECHIE
PORTFOLIO MANAGER: ANDREW NG, P.E.
EXECUTIVE DIRECTOR: KENNETH E. MORIARTY, P.E.

"WARNING-IT IS A VIOLATION, OF THE NEW YORK STATE EDUCATION LAW, SECTION, 7209.2, FOR ANY PERSON, UNLESS (S)HE IS ACTING UNDER THE DIRECTION OF A LICENSED PROFESSIONAL ENGINEER, TO ALTER THIS DOCUMENT IN ANY WAY. IF ALTERED, THE ALTERING PERSON SHALL COMPLY WITH THE REQUIREMENTS OF NEW YORK EDUCATION, LAW, SECTION, 7209.2."

NEW YORK CITY ENVIRONMENTAL PROTECTION
BUREAU OF ENGINEERING DESIGN & CONSTRUCTION
96-05 HORACE HARDING EXPRESSWAY 5th FLOOR
CORONA, NEW YORK 11368
www.nyc.gov/dep

CAPITAL PROJECT WP-282
STATEN ISLAND, NY, OAKWOOD BEACH WRRF
CONTRACT OB-144A

METER BUILDING
PLAN, SECTION, AND DETAIL

DATE: OCTOBER 2026
SHEET NO: 31 OF 74
DRAWING NO. M-001.00

Last Saved By: ZALBER Last Date Saved: 9/1/2026 11:48 AM Date & Time Plotted: 9/9/2026 10:44 AM
Paper Size Printed/Plotted: ANSI A (8.50 x 11.00 Inches) Plot Scale:0.386863 Plot Style Table: ----
Drawing File Name & Drive Location: C:\pwworking\east01\d4268698\M-001.dwg

NOTE:

1. ALL NOTES REFERS TO GM-001.

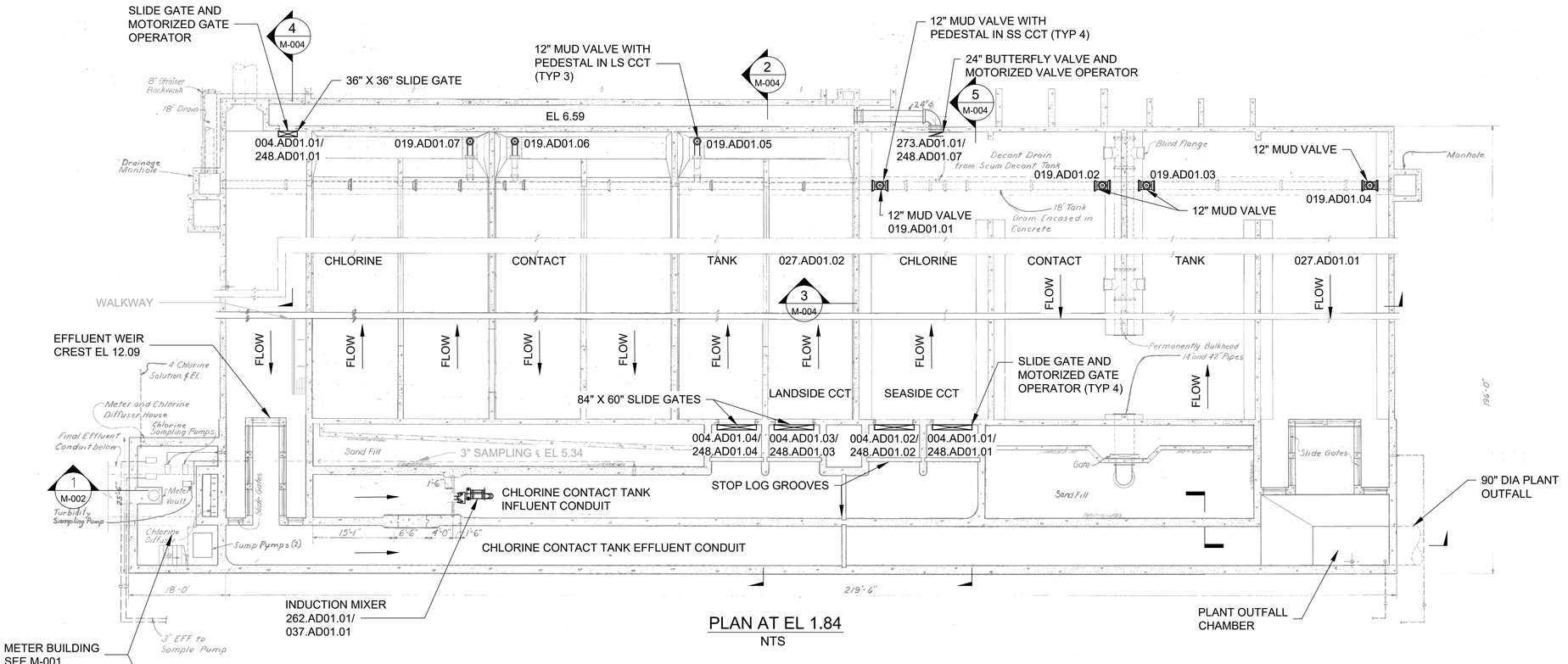

PLAN AT EL 1.84
NTS

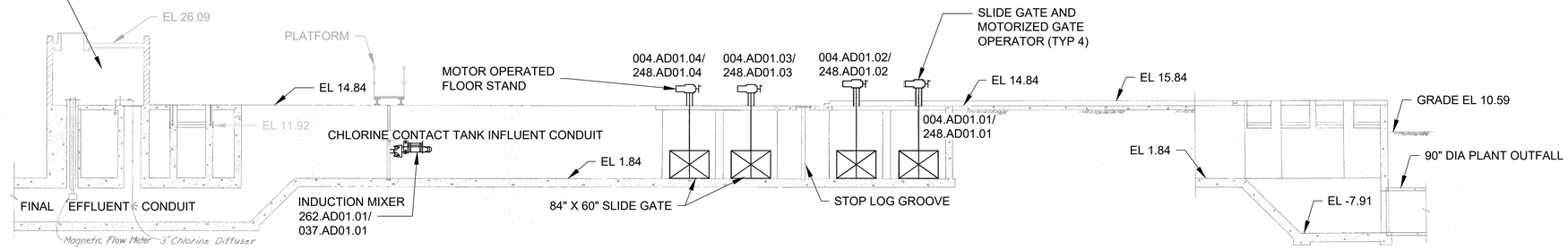

1 - SECTION
NTS

BID SET

SUBMITTAL DATE: 10/2026

GRAPHIC SCALES CHECK BEFORE USE

IF SHEET IS LESS THAN 22" X 34" IT IS A REDUCED PRINT. SCALE ACCORDINGLY

NO.	DATE	REVISIONS/DESCRIPTION	APPR'D.

DESIGNED BY: KH
DRAWN BY: ZA
CHECKED BY: RH
DESIGN LEAD: KAUO HSIEH, P.E.
PROJECT MANAGER: FRANK VISINGARDI, JR., P.E.

STATE OF NEW YORK FRANK VISINGARDI JR. 072716 LICENSED PROFESSIONAL ENGINEER

Environmental Protection

ACCOUNTABLE MANAGER: STELLA UWAECHIE
PORTFOLIO MANAGER: ANDREW NG, P.E.
EXECUTIVE DIRECTOR: KENNETH E. MORIARTY, P.E.

"WARNING-IT IS A VIOLATION, OF THE NEW YORK STATE EDUCATION LAW, SECTION, 7209.2, FOR ANY PERSON, UNLESS (S)HE IS ACTING UNDER THE DIRECTION OF A LICENSED PROFESSIONAL ENGINEER, TO ALTER THIS DOCUMENT IN ANY WAY. IF ALTERED, THE ALTERING PERSON SHALL COMPLY WITH THE REQUIREMENTS OF NEW YORK EDUCATION, LAW, SECTION, 7209.2."

NEW YORK CITY ENVIRONMENTAL PROTECTION
BUREAU OF ENGINEERING DESIGN & CONSTRUCTION
96-05 HORACE HARDING EXPRESSWAY 5th FLOOR
CORONA, NEW YORK 11368
www.nyc.gov/dep

CAPITAL PROJECT WP-282
STATEN ISLAND, NY, OAKWOOD BEACH WRRF
CONTRACT OB-144A

CHLORINE CONTACT TANKS PLAN AT EL 1.84 AND SECTION

DATE: OCTOBER 2026
SHEET NO: 32 OF 74
DRAWING NO. M-002.00

Last Saved By:ZALBER Last Date Saved:9/1/2026 11:49 AM Date & Time Plotted: 9/9/2026 10:45 AM
Paper Size Printed/Plotted: ANSI A (8.50 x 11.00 Inches) Plot Scale:0.386863 Plot Style Table: ----
Drawing File Name & Drive Location: C:\pwworking\east01\d4268698\M-002.dwg

NOTE:

1. ALL NOTES REFERS TO GM-001.

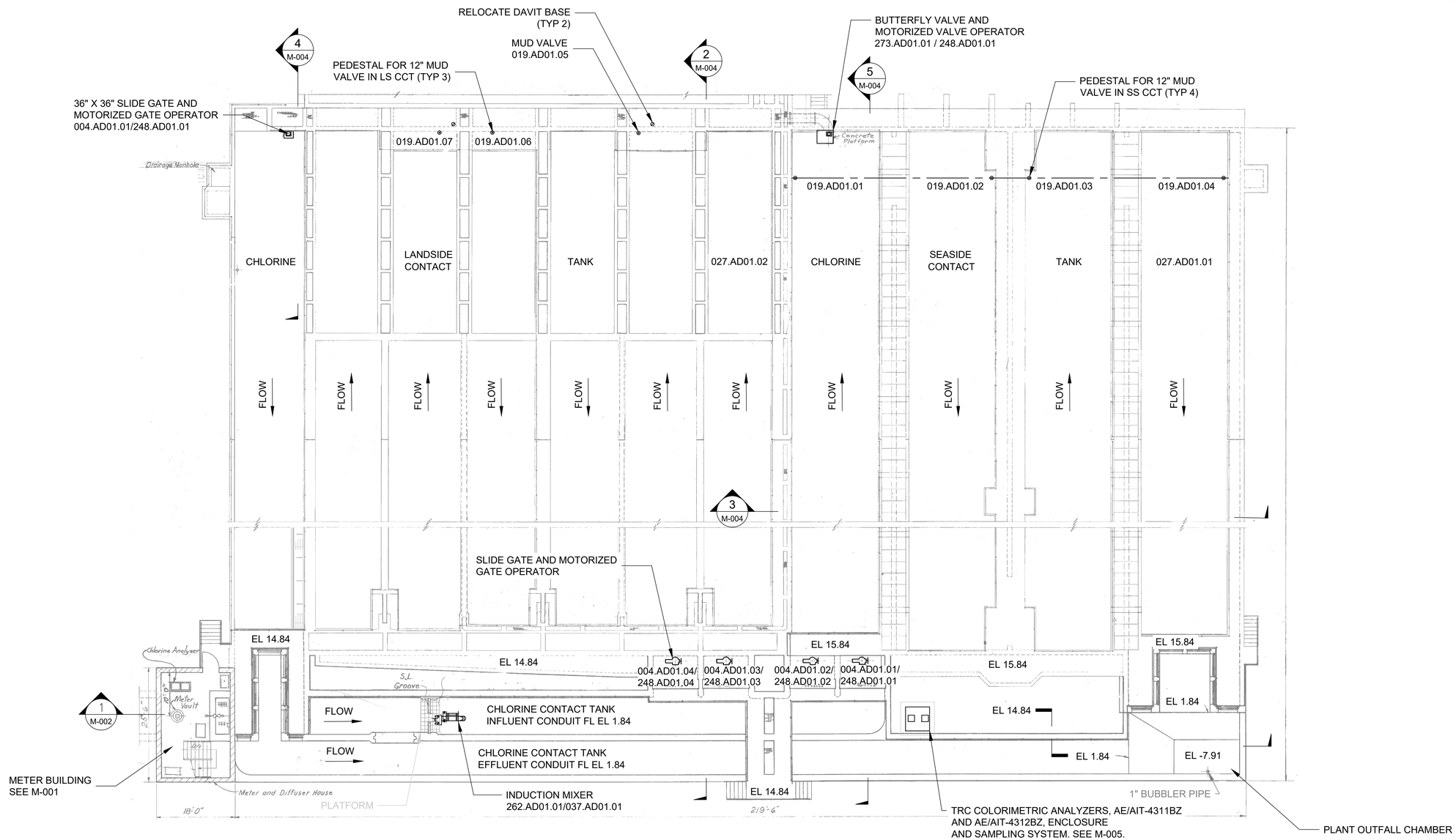

PLAN AT EL. 15.84
NTS

BID SET

SUBMITTAL DATE: 10/2026

GRAPHIC SCALES CHECK BEFORE USE

IF SHEET IS LESS THAN 22" X 34" IT IS A REDUCED PRINT. SCALE ACCORDINGLY

NO.	DATE	REVISIONS/DESCRIPTION	APPR'D.

DESIGNED BY: KH
DRAWN BY: ZA
CHECKED BY: RH
DESIGN LEAD: KAUO HSIEH, P.E.
PROJECT MANAGER: FRANK VISINGARDI, JR., P.E.

ACCOUNTABLE MANAGER: STELLA UWAECHIE
PORTFOLIO MANAGER: ANDREW NG, P.E.
EXECUTIVE DIRECTOR: KENNETH E. MORIARTY, P.E.

"WARNING-IT IS A VIOLATION, OF THE NEW YORK STATE EDUCATION LAW, SECTION, 7209.2, FOR ANY PERSON, UNLESS (S)HE IS ACTING UNDER THE DIRECTION OF A LICENSED PROFESSIONAL ENGINEER, TO ALTER THIS DOCUMENT IN ANY WAY. IF ALTERED, THE ALTERING PERSON SHALL COMPLY WITH THE REQUIREMENTS OF NEW YORK EDUCATION, LAW, SECTION, 7209.2."

NEW YORK CITY ENVIRONMENTAL PROTECTION
BUREAU OF ENGINEERING DESIGN & CONSTRUCTION
96-05 HORACE HARDING EXPRESSWAY 5th FLOOR
CORONA, NEW YORK 11368
www.nyc.gov/dep

CAPITAL PROJECT WP-282
STATEN ISLAND, NY, OAKWOOD BEACH WRRF
CONTRACT OB-144A

CHLORINE CONTACT TANKS
PLAN AT EL. 15.84

DATE: OCTOBER 2026
SHEET NO: 33 OF 74
DRAWING NO. M-003.00

Last Saved By: ZALBER Last Date Saved: 9/9/2026 10:46 AM Date & Time Plotted: 9/9/2026 10:47 AM
Paper Size Printed/Plotted: ANSI A (8.50 x 11.00 Inches) Plot Scale:0.386863 Plot Style Table: ----
Drawing File Name & Drive Location: C:\pwworking\east01\d4268698\M-003.dwg

NOTE:

1. ALL NOTES REFERS TO GM-001.

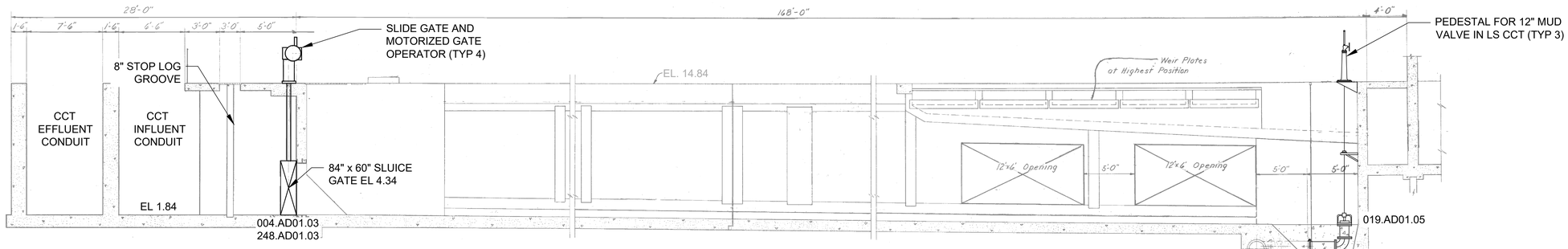

2 / M-002 SECTION N.T.S.

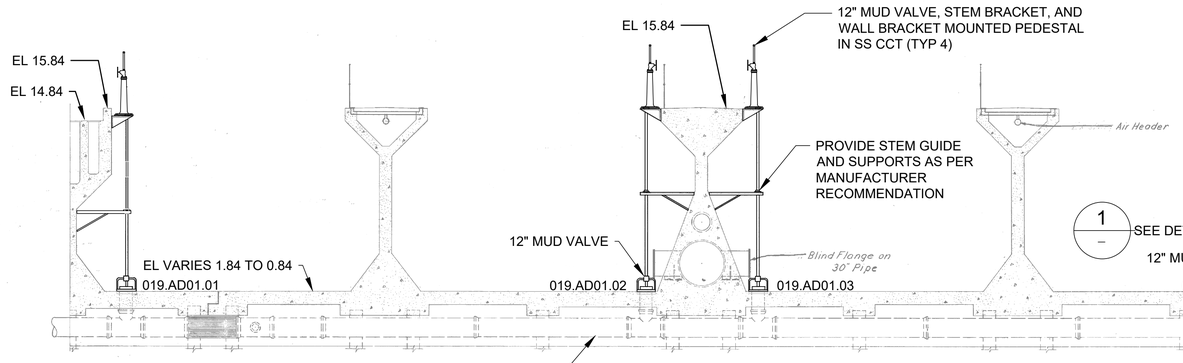

3 / M-002 SECTION N.T.S.

4 / M-002 SECTION N.T.S.

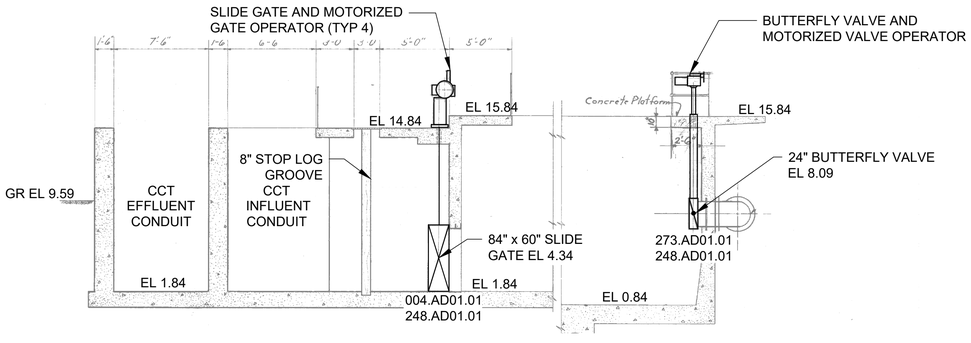

5 / M-002 SECTION N.T.S.

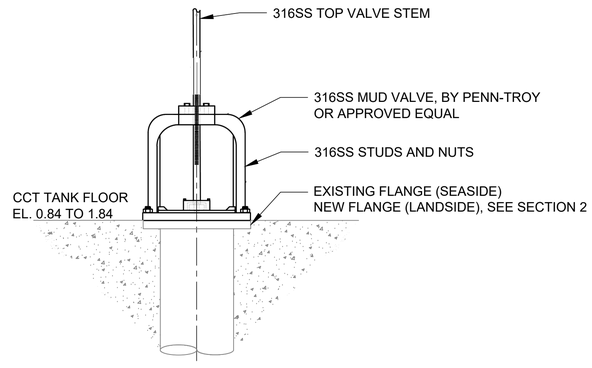

1 / – DETAIL N.T.S.

BID SET

SUBMITTAL DATE: 10/2026

GRAPHIC SCALES CHECK BEFORE USE

IF SHEET IS LESS THAN 22" X 34" IT IS A REDUCED PRINT. SCALE ACCORDINGLY

NO.	DATE	REVISIONS/DESCRIPTION	APPR'D.

DESIGNED BY: KH
DRAWN BY: ZA
CHECKED BY: RH
DESIGN LEAD: KAUO HSIEH, P.E.
PROJECT MANAGER: FRANK VISINGARDI, JR., P.E.

ACCOUNTABLE MANAGER: STELLA UWAECHIE
PORTFOLIO MANAGER: ANDREW NG, P.E.
EXECUTIVE DIRECTOR: KENNETH E. MORIARTY, P.E.

"WARNING-IT IS A VIOLATION, OF THE NEW YORK STATE EDUCATION LAW, SECTION, 7209.2, FOR ANY PERSON, UNLESS (S)HE IS ACTING UNDER THE DIRECTION OF A LICENSED PROFESSIONAL ENGINEER, TO ALTER THIS DOCUMENT IN ANY WAY. IF ALTERED, THE ALTERING PERSON SHALL COMPLY WITH THE REQUIREMENTS OF NEW YORK EDUCATION, LAW, SECTION, 7209.2."

NEW YORK CITY ENVIRONMENTAL PROTECTION
BUREAU OF ENGINEERING DESIGN & CONSTRUCTION
96-05 HORACE HARDING EXPRESSWAY 5th FLOOR
CORONA, NEW YORK 11368
www.nyc.gov/dep

CAPITAL PROJECT WP-282
STATEN ISLAND, NY, OAKWOOD BEACH WRRF
CONTRACT OB-144A

CHLORINE CONTACT TANKS
SECTIONS AND DETAIL

DATE: OCTOBER 2026
SHEET NO: 34 OF 74
DRAWING NO. M-004.00

Last Saved By:ZALBER Last Date Saved:9/1/2026 11:50 AM Date & Time Plotted: 9/9/2026 10:48 AM
Paper Size Printed/Plotted: ANSI A (8.50 x 11.00 Inches) Plot Scale:0.386863' Plot Style Table: ----
Drawing File Name & Drive Location: C:\pwworking\east01\d4268698\M-004.dwg

NOTES:
1. ALL OUTDOOR EXPOSED PIPE EXCEPT 4" DRAIN SHALL BE INSULATED. INSULATION SHALL BE STYLE C WITH MIINIMUM 2-INCH THICKNESS.
2. HOSE SHALL BE MADE OF PTFE LINER AND POLYPROPYLENE BRAID COVER AS MANUFACTURED BY PROFLEX OR EQUAL. FITTINGS SHALL BE MADE OF POLYPROPYLENE.
3. SEE G-004 FOR COLORIMETRIC TRC ANALYZER PROCESS FLOW DIAGRAM.
4. ALL OTHER NOTES REFERS TO GM-001.

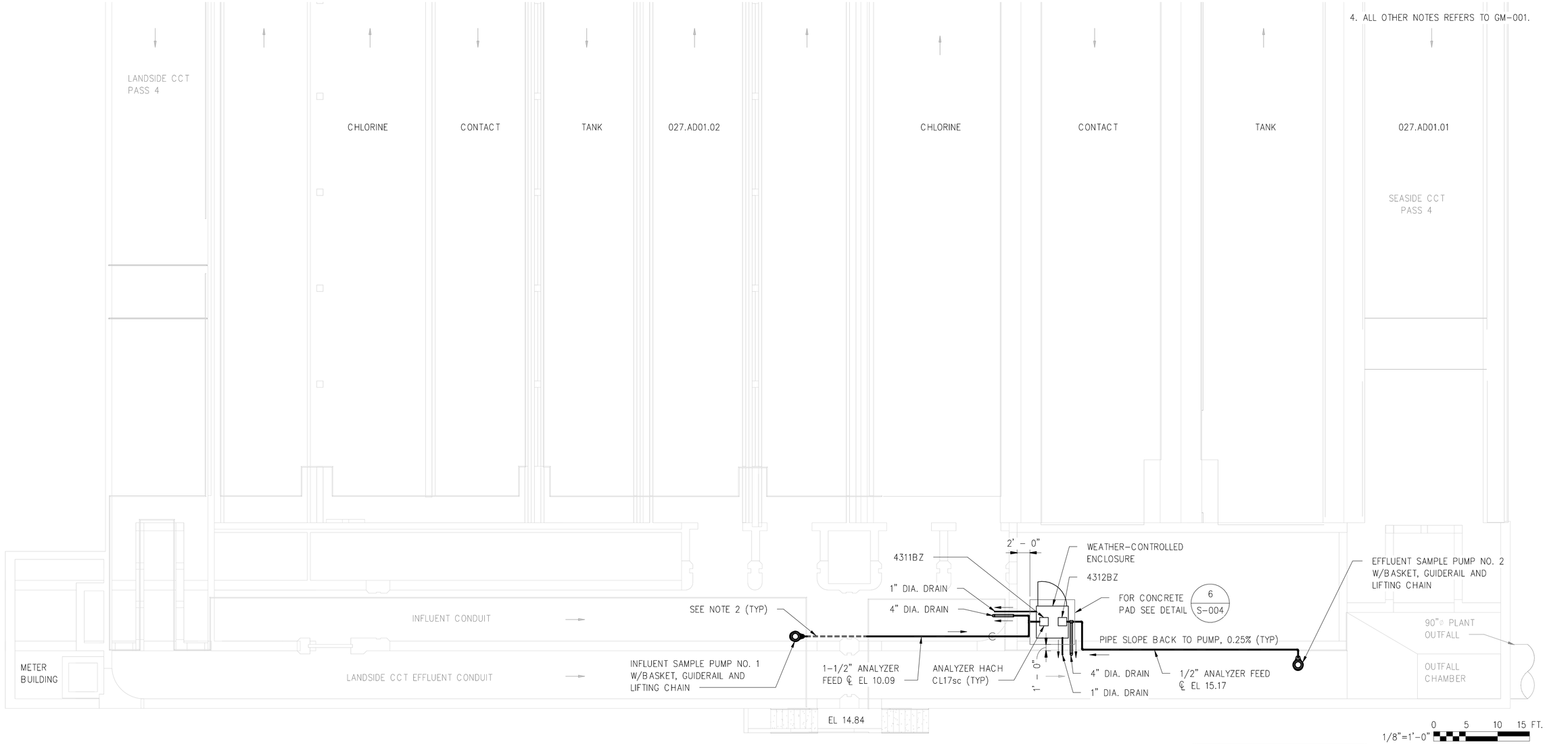

0 5 10 15 FT.
1/8"=1'-0"

BID SET

SUBMITTAL DATE: 10/2026

GRAPHIC SCALES CHECK BEFORE USE

IF SHEET IS LESS THAN 22" X 34" IT IS A REDUCED PRINT. SCALE ACCORDINGLY

NO.	DATE	REVISIONS/DESCRIPTION	APPR'D.

DESIGNED BY: KH
DRAWN BY: JG
CHECKED BY: KL
DESIGN LEAD: KAUO HSIEH, P.E.
SECTION MANAGER: FRANK VISINGARDI, JR., P.E.

STATE OF NEW YORK FRANK VISINGARDI JR. 072716 LICENSED PROFESSIONAL ENGINEER

Environmental Protection

ACCOUNTABLE MANAGER: STELLA UWAECHIE
PORTFOLIO MANAGER: ANDREW NG, P.E.
DEPUTY DIRECTOR, IN HOUSE DESIGN: KENNETH E. MORIARTY, P.E.

"WARNING-IT IS A VIOLATION, OF THE NEW YORK STATE EDUCATION LAW, SECTION, 7209.2, FOR ANY PERSON, UNLESS (S)HE IS ACTING UNDER THE DIRECTION OF A LICENSED PROFESSIONAL ENGINEER, TOALTER THIS DOCUMENT IN ANY WAY. IF ALTERED, THE ALTERING PERSON SHALL COMPLY WITH THE REQUIREMENTS OF NEW YORK EDUCATION, LAW, SECTION, 7209.2."

NEW YORK CITY ENVIRONMENTAL PROTECTION
BUREAU OF ENGINEERING DESIGN & CONSTRUCTION
96-05 HORACE HARDING EXPRESSWAY 5th FLOOR
CORONA, NEW YORK 11368
www.nyc.gov/dep

CAPITAL PROJECT WP-282
STATEN ISLAND, NY, OAKWOOD BEACH WRRF
CONTRACT OB-144A

CHLORINE CONTACT TANKS COLORIMETRIC TRC ANALYZER SAMPLE PUMPS ENCLOSURE AND PIPING PLAN

DATE: OCTOBER 2026
SHEET NO: 35 OF 74
DRAWING NO. M-005.00

All inquiries regarding this drawing(s) or project should be made to NYC Environmental Protection, Bureau of Engineering Design and Construction.

Autodesk Docs://10151452_OB-144A_Oakwood_Beach_Chlorination_Improve_2023/M_HDR002_OB_CCT_PLAN_SECT.rvt
9/26/2025 2:13:11 PM

SYMBOLOGY

ONE LINE SYMBOLS

CPT — CONTROL POWER TRANSFORMER, 480–120V UNLESS SHOWN OTHERWISE. SIZE AS SPECIFIED OR AS REQUIRED IF NOT SPECIFIED.

3A — CONTINUOUS RATING

MCP — MOTOR CIRCUIT PROTECTOR – TRIP RANGE SETTING

S1 — FVNR CONTACTOR NEMA SIZE 1 MINIMUM, OTHER SIZES NOTED BY 2, 3, ETC

OVERLOAD HEATER RELAY

20AT / 100AF — 480V, 3 POLE, MOLDED CASE CIRCUIT BREAKER. MINIMUM SYMMETRICAL INTERRUPTING RATING AS NOTED ON DWGS.
AT – TRIP RATING
AF – FRAME SIZE

K — KIRK KEY INTERLOCK

MTR — MOTOR OR ACTUAL HORSEPOWER AS SHOWN

DRAWOUT DEVICES

FUSE (CURRENT LIMITING TYPE SHOWN AS CLF)

GFCT — GROUND FAULT CURRENT TRANSFORMER SIZE AS REQUIRED

2000/5A — CURRENT TRANSFORMER, RATIO AS SHOWN

PT — POTENTIAL TRANSFORMER, 480–120V UNLESS SHOWN OTHERWISE, SIZE AS REQ'D

SENSOR SIZE
SSTI 800AS / 800AF — CIRCUIT BREAKER WITH RMS TYPE SOLID STATE TRIP PROGRAMMER
FRAME SIZE

SSTIMMD 800AS / 800AF — DRAWOUT POWER CIRCUIT BREAKER WITH RMS TYPE SOLID STATE TRI PROGRAMMER, ELECTRONIC MONITORING AND COMMUNICATION

JB (J) — JUNCTION BOX

LA — LIGHTNING ARRESTOR

F — FUSED DISCONNECT SWITCH

M / RV — MOTOR STARTER/CONTROLLER
(NON COMBINATION–COMBINATION–MANUAL)
RV DENOTES REDUCED VOLTAGE

VFD — VARIABLE FREQUENCY DRIVE

NONFUSED DISCONNECT SWITCH

52 — MEDIUM VOLTAGE CIRCUIT BREAKER

480V / 45KVA / 208Y/120V — TRANSFORMER: SIZE, VOLTAGE & CONFIGURATION AS SHOWN.
△ = DELTA
Y = GROUNDED WYE

SPD — SURGE PROTECTIVE DEVICE

G — GENERATOR

ø — PHASE

GROUND

AIR TEMINAL

BARE COPPER CONDUCTOR

EXOTHERMIC BOND

DMU — POWER METER

ATS

CONTROL SYMBOLS

MOMENTARY CONTACT PUSH BUTTON NORMALLY OPEN

MOMENTARY CONTACT PUSH BUTTON NORMALLY CLOSED

H O R (xoo) (oox) — THREE POSITION MAINTAINED CONTACT SELECTOR SWITCH, SWITCHING AS INDICATED
HOR: HAND–OFF–REMOTE, HOA: HAND–OFF–AUTO
TOR: TEST–OFF–REMOTE

NORMALLY OPEN CONTACT

NORMALLY CLOSED CONTACT

R — INDICATING PILOT LIGHT–(PUSH–TO–TEST TYPE)
W – WHITE B – BLUE
R – RED A – AMBER
G – GREEN C – CLEAR

M — MOTOR STARTER/CONTACTOR COIL
OTHER COIL DESIGNATIONS
S – SLOW F – FORWARD L – LOW
F – FAST R – REVERSE H – HIGH
O – OPEN CL – CLOSE C – CONTACTOR

CR — RELAY COIL, DESIGNATIONS AS FOLLOWS:
CR – CONTROL RELAY
OR – OVERLOAD RELAY
TD – TIME DELAY RELAY
AR – ALARM RELAY
RR – READY RELAY
SR – SEAL WATER RELAY
TR – TEMPERATURE RELAY

NOTE:

1. THIS IS A STANDARD SHEET, NOT ALL SYMBOLS MAY BE USED.

MTR — MOTOR OR ACTUAL HORSEPOWER AS SHOWN

CONNECTION POINT

30A — DISCONNECT SWITCH SIZE AS SHOWN

FU — FUSED DISCONNECT SWITCH SIZE AS SHOWN

GROUND CONNECTION

FIELD LOCATED DEVICE

DEVICE LOCATED AT LOCAL CONTROL STATION

DEVICE LOCATED IN CONTROL PANEL

CONDUCTOR CROSSOVER

TERMINATION
CONNECTION

REMOTE TERMINATIONS

ETM — ELAPSED TIME METER

SHIELDED WIRE WITH GROUND

MTR — MOTOR

START STOP — SWITCH – TWO POSITION MAINTAINED CONTACT SELECTOR STOP–START

SWITCH – DISCONNECT OPEN

SWITCH – CIRCUIT INTERRUPTER OPEN

OVERLOAD HEATER THREE PHASE CONDITION

LIGHTING PLAN SYMBOLS

D 1 / a — LIGHTING FIXTURE INDENTIFICATION
D – INDICATES FIXTURE TYPE
1 – INDICATES CIRCUIT NO.
a – INDICATES SWITCHING

CEILING OR PENDANT MOUNTED LIGHTING FIXTURE

POLE OR STANCHION MOUNTED LIGHTING FIXTURE

WALL MOUNTED LIGHTING FIXTURE

DUAL HEAD WALL MOUNTED EMERGENCY LIGHTING FIXTURE

ILLUMINATED EMERGENCY EXIT SIGN. SHADED AREA INDICATES FACE OF SIGN

POWER LAYOUT SYMBOLS

CAPPED CONDUIT

CONDUIT CONCEALED IN CEILING, WALLS, BELOW OR IN FLOOR SLAB (UNLESS NOTED OTHERWISE)

CONDUIT EXPOSED

GROUND CABLE # 4/0 AWG COPPER UNLESS NOTED OTHERWISE

CONDUIT TURNING DOWN

CONDUIT TURNING UP

COMBINATION STARTER

30A / 3P — NON–FUSED DISCONNECT SWITCH NEMA 4X STAINLESS STEEL ENCLOSURE UNLESS NOTED OTHERWISE. RATING SHALL BE 30A, 3 POLE UNLESS NOTED OTHERWISE.
F – INDICATES FUSED
WP – INDICATES WEATHERPROOF

DEMOLITION HATCH

S1a(3W) — LIGHTING SWITCH SINGLE POLE SURFACE MOUNTED UNLESS NOTED OTHERWISE
( ) SEE IDENTIFICATION BELOW
S – INDICATES SWITCH
1 – INDICATES CIRCUIT NO.
a – INDICATES SWITCHING
3W – 3 WAY

R3 (GFI) SINGLE / R3 (GFI) DUPLEX — GROUNDING TYPE CONVENIENCE RECEPTACLE, SURFACE MOUNTED
( ) SEE IDENTIFICATION BELOW, RIGID CONDUIT INSTALLATION
R – INDICATES RECEPTACLE
3 – INDICATES CIRCUIT NO.
GFI – GROUND FAULT INTERRUPTER
WP – WEATHERPROOF

JB (F) — JUNCTION BOX, SIZE TO BE DETERMINED BY ELECTRICAL CONTRACTOR
( ) SEE IDENTIFICATION BELOW
F – FLUSH

FIELD INSTRUMENT

MH — MANHOLE

HH — HANDHOLE

GROUND BAR

LINE OF DEMARCATION

BID SET

SUBMITTAL DATE: 10/2026

GRAPHIC SCALES CHECK BEFORE USE

IF SHEET IS LESS THAN 22" X 34" IT IS A REDUCED PRINT. SCALE ACCORDINGLY

NO.	DATE	REVISIONS/DESCRIPTION	APPR'D.

DESIGNED BY: DP
DRAWN BY: KC
CHECKED BY: DF
DESIGN LEAD: DAVID FREDERICKS, PE
PROJECT MANAGER: FRANK VISINGARDI JR., PE

Savin Engineers, P.C.

STATE OF NEW YORK — DAVID G. FREDERICKS — LICENSED PROFESSIONAL ENGINEER — 086076

Environmental Protection

ACCOUNTABLE MANAGER: STELLA UWAECHIE
PORTFOLIO MANAGER: ANDREW NG, P.E.
EXECUTIVE DIRECTOR: KENNETH E. MORIARTY, P.E.

"WARNING-IT IS A VIOLATION, OF THE NEW YORK STATE EDUCATION LAW, SECTION, 7209.2, FOR ANY PERSON, UNLESS (S)HE IS ACTING UNDER THE DIRECTION OF A LICENSED PROFESSIONAL ENGINEER, TO ALTER THIS DOCUMENT IN ANY WAY. IF ALTERED, THE ALTERING PERSON SHALL COMPLY WITH THE REQUIREMENTS OF NEW YORK EDUCATION, LAW, SECTION, 7209.2."

NEW YORK CITY ENVIRONMENTAL PROTECTION
BUREAU OF ENGINEERING DESIGN & CONSTRUCTION
96-05 HORACE HARDING EXPRESSWAY 5th FLOOR
CORONA, NEW YORK 11368
www.nyc.gov/dep

CAPITAL PROJECT WP-282
STATEN ISLAND, NY, OAKWOOD BEACH WRRF
CONTRACT OB-144A
SYMBOLS

DATE: OCTOBER 2026
SHEET NO: 36 OF 74
DRAWING NO. GE–001.00

Last Saved By & Date: ZALBER, Wednesday, September 09, 2026 and Date Plotted: Wednesday, September 30, 2026 Time: 10:49 AM
Paper Size: ANSI A (8.50 x 11.00 Inches) Plot Scale: 0.386863 Plot Style Table: (N)_BEDC_BW.ctb
Drawing Name: & Location: C:\SAVIN\OB-144A\BID\GE-001.00.dwg

ABBREVIATIONS

A	–	AMPS	LC	–	LIGHTING CONTACTOR
AFF	–	ABOVE FINISHED FLOOR	LCS	–	LOCAL CONTROL STATION
AIC	–	AMPS INTERRUPTING CAPACITY	LP	–	LIGHTING PANEL
ATS	–	AUTOMATIC TRANSFER SWITCH	LPI	–	LIGHTNING PROTECTION INSTITUTE
AWG	–	AMERICAN WIRE GAUGE	LPS	–	LIGHTNING PROTECTION SYSTEM
BKR	–	BREAKER	MAX	–	MAXIMUM
BLDG	–	BUILDING	MCC	–	MOTOR CONTROL CENTER
C	–	CONDUIT	MCP	–	MOTOR CIRCUIT PROTECTOR
CB	–	CIRCUIT BREAKER	MOD	–	MOTOR OPERATED DAMPER
CCT	–	CHLORINE CONTACT TANKS	MPC	–	MINI–POWER CENTER
CCTV	–	CLOSED CIRCUIT TELEVISION	NEC	–	NATIONAL ELECTRICAL CODE
CE	–	COMMUNICATION ENCLOSURE	NFPA	–	NATIONAL FIRE PROTECTION ASSOCIATION
CHLOR	–	CHLORINATION			
CKT	–	CIRCUIT	NEMA	–	NATIONAL ELECTRICAL MANUFACTURERS ASSOCIATION
CONT	–	CONTINUATION			
CPT	–	CONTROL POWER TRANSFORMER	NC	–	NORMALLY CLOSED
CT	–	CURRENT TRANSFORMER	NO	–	NORMALLY OPEN, NUMBER
DEP		DEPARTMENT OF ENVIRONMENTAL	NTS	–	NOT TO SCALE
	–	PROTECTION	NYCEC	–	NEW YORK CITY ELECTRICAL CODE
DMU	–	DIGITAL MULTIMETERING UNIT	PB	–	PULL BOX
DS	–	DISCONNECT SWITCH	PH	–	PHASE
EL	–	ELEVATION	PP	–	POWER PANEL
EMH–#, MH	–	ELECTRIC MANHOLE	PT	–	POTENTIAL TRANSFORMER
E–STOP	–	EMERGENCY SHUTDOWN	PVC	–	POLYVINYL CHLORIDE
FRP	–	FIBRE–REINFORCED PLASTIC	RGS	–	RIGID GALVANIZED STEEL
FCP	–	FIELD CONTROL PANEL	RTD	–	RESISTANCE TEMPERATURE DETECTOR
FOPP	–	FIBER OPTIC PATCH PANEL	S#	–	STARTER SIZE
FVNR		FULL VOLTAGE NON–REVERSING	SPD	–	SURGE PROTECTION DEVICE
GFCT	–	GROUND FAULT CURRENT	SS	–	STAINLESS STEEL
	–	TRANSFORMER	SS–#	–	SHIPPING SPLIT
G, GND	–	GROUND	SWGR	–	SWITCHGEAR
HH	–	HANDHOLE	T	–	TRANSFORMER
HLCP	–	HVAC LOCAL CONTROL PANEL	TB	–	TERMINAL BLOCK
HS	–	HAND SWITCH	TSP	–	TWISTED SHIELDED PAIR
HTJB	–	HEAT TRACE JUNCTION BOX	TYP	–	TYPICAL
HZ	–	HERTZ	U.O.N.	–	UNLESS OTHERWISE NOTED
IHH	–	INSTRUMENTATION HANDHOLE	V	–	VOLTS
JB	–	JUNCTION BOX	VAC	–	VOLTS ALTERNATING CIRCUIT
KAIC	–	KILO AMPERE INTERRUPTING CAPACITY	VFD	–	VARIABLE FREQUENCY DRIVE
			W	–	WATTS
KCMIL	–	ONE THOUSAND CIRCULAR MILS	WP	–	WEATHERPROOF
KVA	–	KILO–VOLT AMPS	XFMR	–	TRANSFORMER
KV	–	KILO–VOLTS	XP	–	EXPLOSION PROOF
KW	–	KILOWATTS			

DEMOLITION NOTES

1. THE CONTRACTOR SHALL COORDINATE ALL DEMOLITION WORK WITH THE CITY AND THE ENGINEER. NO EQUIPMENT SHALL BE REMOVED UNTIL APPROVED BY THE ENGINEER.
2. THE CONTRACTOR SHALL DE–ENERGIZE AND SAFE–OFF ALL EQUIPMENT SHOWN TO BE REMOVED UNDER THIS CONTRACT AS REQUIRED. ALL OPENINGS IN WALLS, FLOORS, ENCLOSURES, ETC LEFT DUE TO DEMOLITION OF ELECTRICAL EQUIPMENT SHALL BE PATCHED, SEALED AND PAINTED TO MATCH EXISTING MATERIALS AND SURFACES.
3. CONTRACTOR SHALL NOT CONSIDER ANY OF THE DEMOLISHED COMPONENTS TO BE SALVAGEABLE BY THE CONTRACTOR UNTIL AFTER THE CITY HAS OFFICIALLY DETERMINED THEY DO NOT INTEND TO RETAIN THE COMPONENT.

EXISTING MCC MODIFICATION AND REPLACEMENT NOTES

1. FURNISH & INSTALL NEW DEVICES AS SHOWN. NEW EQUIPMENT SHALL BE COMPATIBLE WITH THE EXISTING MCC. MCC MANUFACTURER IS SHOWN ON THE SINGLE LINE DIAGRAMS. SHORT CIRCUIT RATINGS SHALL BE THE SAME AS THE EXISTING MCC.
2. CLEAN EXISTING MCC CUBICLES SHOWN TO BE MODIFIED UNDER THIS CONTRACT BOTH INSIDE AND OUT. REMOVE ALL DIRT & DUST. REMOVE BUCKET AND GREASE JAWS & BLADES. TIGHTEN ALL CONNECTIONS.
3. REMOVALS AND MODIFICATIONS SHALL BE COORDINATED BETWEEN TRADES, THE ENGINEER & THE CITY, AS THIS IS AN OPERATING PLANT AND MUST REMAIN IN OPERATION.
4. ALL INFORMATION SHOWN IS BELIEVED TO BE CORRECT. THE CONTRACTOR SHALL NOTIFY THE ENGINEER OF ANY DISCREPANCIES FOUND DURING CONSTRUCTION.
5. PROVIDE OPERATION & MAINTENANCE MANUALS WITH SCHEMATIC & WIRING DIAGRAMS FOR EACH MCC CUBICLE BEING MODIFIED OR PROVIDED UNDER THIS CONTRACT.
6. WHERE EXISTING MCC MOTOR STARTER CUBICLES ARE SHOWN TO BE RE–USED, CONTRACTOR SHALL MODIFY/ REPLACE EXISTING STARTER CUBICLE AS REQUIRED TO MATCH EXISTING CONTROL FUNCTIONALITY. CONTRACTOR SHALL INCLUDE IN THEIR BID ALL NECESSARY FIELD INVESTIGATION, TO VERIFY AND DOCUMENT FOR REVIEW BY THE ENGINEER, ALL ASPECTS OF THE EXISTING CUBICLE FEEDERS AND CONTROLS.

GENERAL NOTES

1. ALL CONDUITS ARE SHOWN DIAGRAMMATICALLY. EXACT RUNS SHALL BE DETERMINED BY THE CONTRACTOR IN THE FIELD, EXCEPT WHERE SPECIFICALLY DIMENSIONED ON PLANS.
2. EXACT CONDUIT STUB–UP LOCATIONS ARE TO BE DETERMINED BY THE CONTRACTOR BASED ON THE CERTIFIED MANUFACTURER'S DRAWINGS OF THE RESPECTIVE EQUIPMENT. CONDUITS SHALL BE INSTALLED TO AGREE WITH THE EQUIPMENT FURNISHED.
3. CONTRACTOR SHALL VERIFY STRUCTURAL JOINTS FOR EXISTING STRUCTURES IN THE FIELD PRIOR TO INSTALLATION OF CONDUIT.
4. THE CONTRACTOR SHALL PROVIDE A LOCKABLE 120V RATED ON/OFF SWITCH AT EACH INSTRUMENT AND VALVE ACTUATOR POWERED AT 120VAC.
5. ALL JUNCTION BOX/PULLBOX SIZES SHALL BE DETERMINED IN THE FIELD, UNLESS OTHERWISE NOTED.
6. ALL WORK SHALL BE PERFORMED IN ACCORDANCE WITH THE LATEST NYCEC AND ALL OTHER APPLICABLE CODES.
7. PROVIDE GROUNDING PLATES FOR CONNECTION TO GROUND GRID OR BUILDING STEEL AT ALL NEW ELECTRICAL DISTRIBUTION EQUIPMENT INCLUDING TRANSFORMERS. ALL TRANSFORMER NEUTRAL TERMINALS SHALL BE BONDED TO LOCAL GROUND GRID OR STRUCTURAL STEEL GROUNDING ELECTRODE. CONDUCTOR SHALL BE SIZED IN ACCORDANCE WITH THE NEC.
8. ALL PENETRATIONS FOR CONDUIT ENTRIES TO ELECTRICAL ENCLOSURES LOCATED IN DAMP OR WET AREAS SHALL BE MADE FROM THE BOTTOM OR SIDE OF ENCLOSURE.

BID SET

SUBMITTAL DATE: 10/2026

GRAPHIC SCALES CHECK BEFORE USE

IF SHEET IS LESS THAN 22" X 34" IT IS A REDUCED PRINT. SCALE ACCORDINGLY

NO.	DATE	REVISIONS/DESCRIPTION	APPR'D.

DESIGNED BY: DP
DRAWN BY: KC
CHECKED BY: DF
DESIGN LEAD: DAVID FREDERICKS, PE
PROJECT MANAGER: FRANK VISINGARDI JR., PE

Savin Engineers, P.C.

STATE OF NEW YORK · DAVID G. FREDERICKS · 086076 · LICENSED PROFESSIONAL ENGINEER

Environmental Protection

ACCOUNTABLE MANAGER: STELLA UWAECHIE
PORTFOLIO MANAGER: ANDREW NG, P.E.
EXECUTIVE DIRECTOR: KENNETH E. MORIARTY, P.E.

"WARNING-IT IS A VIOLATION, OF THE NEW YORK STATE EDUCATION LAW, SECTION, 7209.2, FOR ANY PERSON, UNLESS (S)HE IS ACTING UNDER THE DIRECTION OF A LICENSED PROFESSIONAL ENGINEER, TO ALTER THIS DOCUMENT IN ANY WAY. IF ALTERED, THE ALTERING PERSON SHALL COMPLY WITH THE REQUIREMENTS OF NEW YORK EDUCATION, LAW, SECTION, 7209.2."

NEW YORK CITY ENVIRONMENTAL PROTECTION
BUREAU OF ENGINEERING DESIGN & CONSTRUCTION
96-05 HORACE HARDING EXPRESSWAY 5th FLOOR
CORONA, NEW YORK 11368
www.nyc.gov/dep

CAPITAL PROJECT WP-282
STATEN ISLAND, NY, OAKWOOD BEACH WRRF
CONTRACT OB-144A
ABBREVIATIONS AND GENERAL NOTES

DATE: OCTOBER 2026
SHEET NO: 37 OF 74
DRAWING NO. GE–002.00

All inquiries regarding this drawing(s) or project should be made to NYC Environmental Protection, Bureau of Engineering Design and Construction.

Last Saved By & Date: ZALBER, Wednesday, September 09, 2026 and Date Plotted: Wednesday, September 30, 2026 Time: 10:50 AM
Paper Size: ANSI A (8.50 x 11.00 Inches) Plot Scale: 0.386863 Plot Style Table: (N)_BEDC_BW.ctb
Drawing Name: & Location: C:\SAVIN\OB-144A\BID\GE-002.00.dwg

NOTE:

1. SEE GE-001 & GE-002 FOR ELECTRICAL NOTES, SYMBOLS & ABBREVIATIONS.

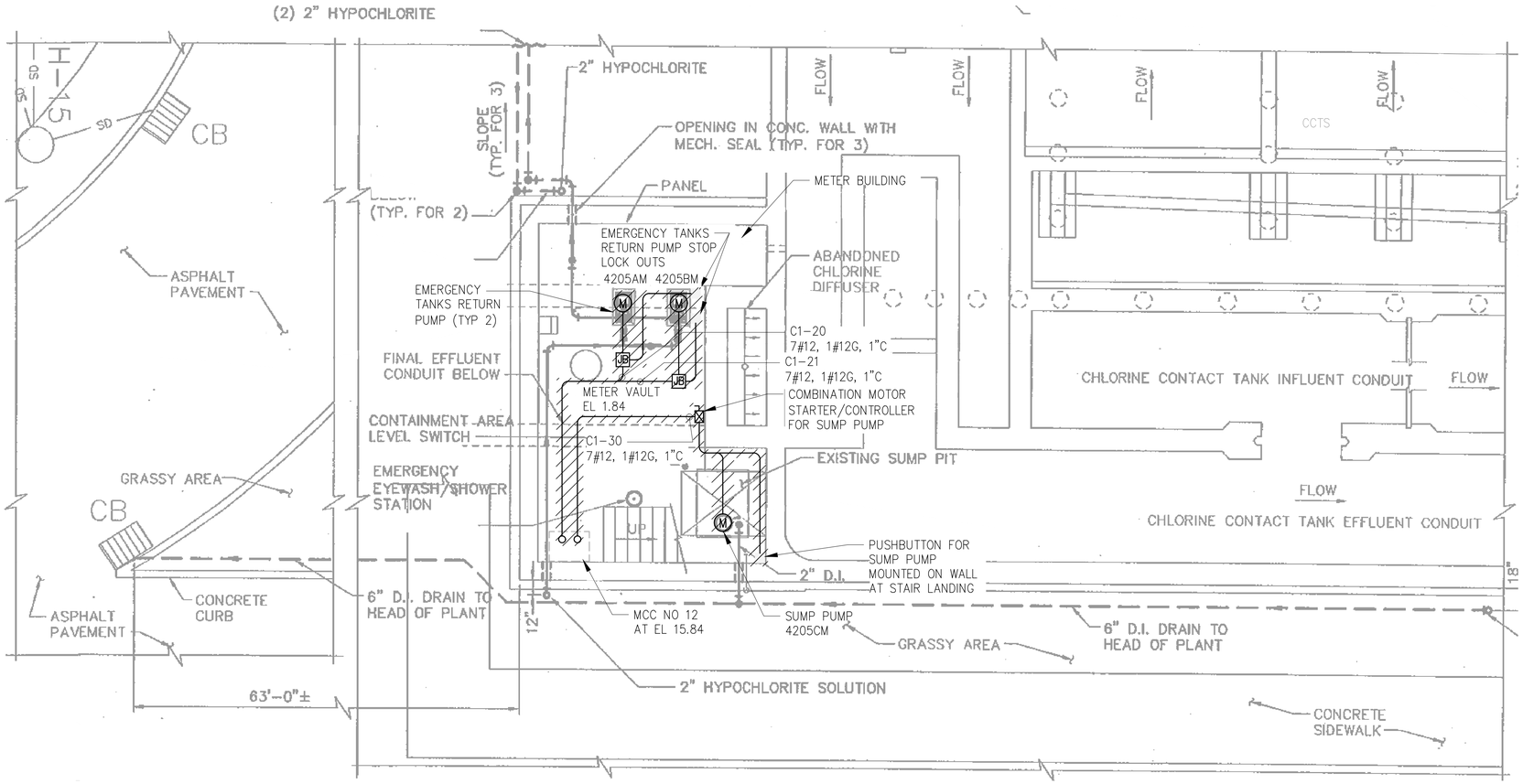

METER BUILDING – DEMOLITION PLAN AT EL 1.84

SCALE: N.T.S.

BID SET

SUBMITTAL DATE: 10/2026

GRAPHIC SCALES CHECK BEFORE USE

IF SHEET IS LESS THAN 22" X 34" IT IS A REDUCED PRINT. SCALE ACCORDINGLY

NO.	DATE	REVISIONS/DESCRIPTION	APPR'D.

DESIGNED BY: DP
DRAWN BY: KC
CHECKED BY: DF
DESIGN LEAD: DAVID FREDERICKS, PE
PROJECT MANAGER: FRANK VISINGARDI JR., PE

Savin Engineers, P.C.

STATE OF NEW YORK · DAVID G. FREDERICKS · 086076 · LICENSED PROFESSIONAL ENGINEER

Environmental Protection

ACCOUNTABLE MANAGER: STELLA UWAECHIE
PORTFOLIO MANAGER: ANDREW NG, P.E.
EXECUTIVE DIRECTOR: KENNETH E. MORIARTY, P.E.

"WARNING-IT IS A VIOLATION, OF THE NEW YORK STATE EDUCATION LAW, SECTION, 7209.2, FOR ANY PERSON, UNLESS (S)HE IS ACTING UNDER THE DIRECTION OF A LICENSED PROFESSIONAL ENGINEER, TO ALTER THIS DOCUMENT IN ANY WAY. IF ALTERED, THE ALTERING PERSON SHALL COMPLY WITH THE REQUIREMENTS OF NEW YORK EDUCATION, LAW, SECTION, 7209.2."

NEW YORK CITY ENVIRONMENTAL PROTECTION
BUREAU OF ENGINEERING DESIGN & CONSTRUCTION
96-05 HORACE HARDING EXPRESSWAY 5th FLOOR
CORONA, NEW YORK 11368
www.nyc.gov/dep

CAPITAL PROJECT WP-282
STATEN ISLAND, NY, OAKWOOD BEACH WRRF
CONTRACT OB-144A

METER BUILDING
DEMOLITION PLAN AT EL 1.84

DATE: OCTOBER 2026
SHEET NO: 38 OF 74
DRAWING NO. DE-001.00

Last Saved By & Date: Kchen, Wednesday, September 09, 2026 and Date Plotted: Wednesday, September 30, 2026 Time: 10:51 AM
Paper Size: ANSI A (8.50 x 11.00 Inches) Plot Scale: 0.386863 Plot Style Table: (N)_BEDC_BW.ctb
Drawing Name: & Location: C:\SAVIN\OB-144A\BID\DE-001.00.dwg

All inquiries regarding this drawing(s) or project should be made to NYC Environmental Protection, Bureau of Engineering Design and Construction.

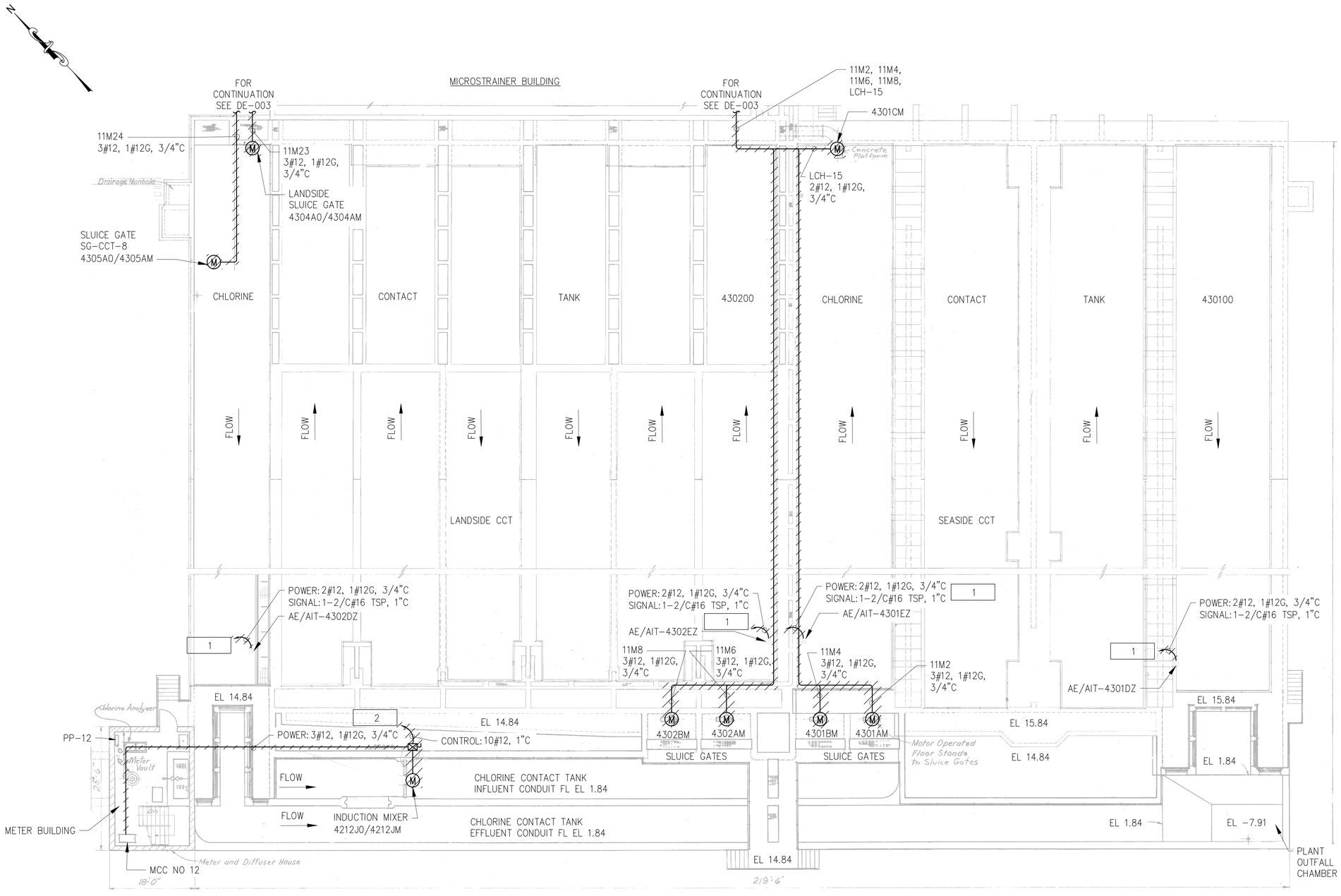

NOTES:

1. SEE GE-001 & GE-002 FOR ELECTRICAL NOTES, SYMBOLS & ABBREVIATIONS.
2. THE CONTRACTOR SHALL INVESTIGATE POWER / CONTROL / SIGNAL CONDUITS AND WIRES FOR ALL CCT EQUIPMENT AND INSTRUMENTS SHOWN TO BE DEMOLISHED AND CONFIRM ALL EXISTING CONNECTIONS PRIOR TO PERFORMING ANY WORK.

KEY NOTES: #

1 — DEMOLISH POWER / SIGNAL CONDUIT AND WIRE BACK TO SOURCE. AE/AIT SHALL BE RE-USED AND RECONNECTED TO NEW LCP-4200.

2 — DEMOLISH CONTROL CONDUIT AND WIRE BACK TO SOURCE.

CHLORINE CONTACT TANKS – DEMOLITION PLAN AT EL 15.84

SCALE: NTS

BID SET

SUBMITTAL DATE: 10/2026

GRAPHIC SCALES CHECK BEFORE USE

IF SHEET IS LESS THAN 22" X 34" IT IS A REDUCED PRINT. SCALE ACCORDINGLY

NO.	DATE	REVISIONS/DESCRIPTION	APPR'D.

DESIGNED BY: DP
DRAWN BY: KC
CHECKED BY: DF
DESIGN LEAD: DAVID FREDERICKS, PE
PROJECT MANAGER: FRANK VISINGARDI JR., PE

Savin Engineers, P.C.

STATE OF NEW YORK DAVID S. FREDERICKS 086076 LICENSED PROFESSIONAL ENGINEER

Environmental Protection

ACCOUNTABLE MANAGER: STELLA UWAECHIE
PORTFOLIO MANAGER: ANDREW NG, P.E.
EXECUTIVE DIRECTOR: KENNETH E. MORIARTY, P.E.

"WARNING-IT IS A VIOLATION, OF THE NEW YORK STATE EDUCATION LAW, SECTION, 7209.2, FOR ANY PERSON, UNLESS (S)HE IS ACTING UNDER THE DIRECTION OF A LICENSED PROFESSIONAL ENGINEER, TO ALTER THIS DOCUMENT IN ANY WAY. IF ALTERED, THE ALTERING PERSON SHALL COMPLY WITH THE REQUIREMENTS OF NEW YORK EDUCATION, LAW, SECTION, 7209.2."

NEW YORK CITY ENVIRONMENTAL PROTECTION
BUREAU OF ENGINEERING DESIGN & CONSTRUCTION
96-05 HORACE HARDING EXPRESSWAY 5th FLOOR
CORONA, NEW YORK 11368
www.nyc.gov/dep

CAPITAL PROJECT WP-282
STATEN ISLAND, NY, OAKWOOD BEACH WRRF
CONTRACT OB-144A

CHLORINE CONTACT TANKS
DEMOLITION PLAN AT EL 15.84

DATE: OCTOBER 2026
SHEET NO: 39 OF 74
DRAWING NO. DE-002.00

Last Saved By & Date:ZALBER, Wednesday, September 09, 2026 and Date Plotted:Wednesday, September 30, 2026 Time: 10:53 AM
Paper Size:ANSI A (8.50 x 11.00 Inches) Plot Scale:0.386863 Plot Style Table:(N)_BEDC_BW.ctb
Drawing Name: & Location:C:\SAVIN\08-144A\BID\DE-002.00.dwg
All inquiries regarding this drawing(s) or project should be made to NYC Environmental Protection, Bureau of Engineering Design and Construction.

NOTE:

1. SEE GE-001 & GE-002 FOR ELECTRICAL NOTES, SYMBOLS & ABBREVIATIONS.

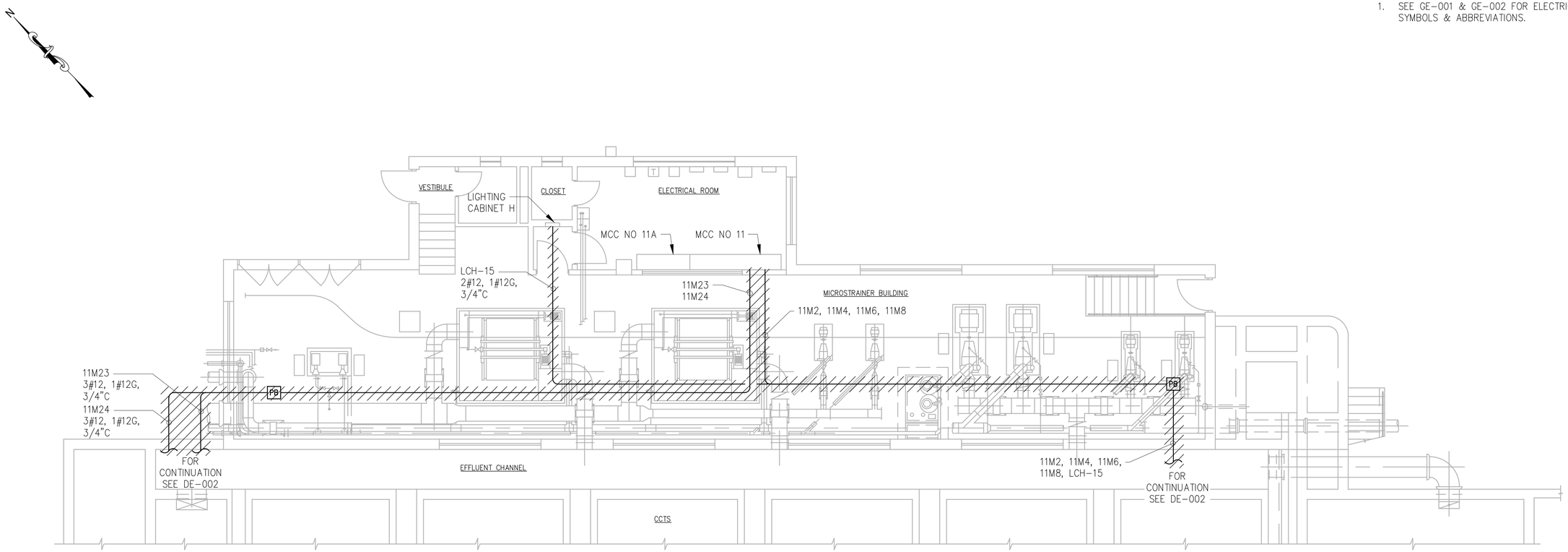

MICROSTRAINER BUILDING – DEMOLITION PLAN

SCALE: 3/16"=1'-0"

0 5 10 FT.
3/16"=1'-0"

BID SET

SUBMITTAL DATE: 10/2026

GRAPHIC SCALES CHECK BEFORE USE

IF SHEET IS LESS THAN 22" X 34" IT IS A REDUCED PRINT. SCALE ACCORDINGLY

NO.	DATE	REVISIONS/DESCRIPTION	APPR'D.

DESIGNED BY: DP
DRAWN BY: KC
CHECKED BY: DF
DESIGN LEAD: DAVID FREDERICKS, PE
PROJECT MANAGER: FRANK VISINGARDI JR., PE

Savin Engineers, P.C.

STATE OF NEW YORK · DAVID G. FREDERICKS · 086076 · LICENSED PROFESSIONAL ENGINEER

NYC Environmental Protection

ACCOUNTABLE MANAGER
STELLA UWAECHIE

PORTFOLIO MANAGER
ANDREW NG, P.E.

EXECUTIVE DIRECTOR
KENNETH E. MORIARTY, P.E.

"WARNING-IT IS A VIOLATION, OF THE NEW YORK STATE EDUCATION LAW, SECTION, 7209.2, FOR ANY PERSON, UNLESS (S)HE IS ACTING UNDER THE DIRECTION OF A LICENSED PROFESSIONAL ENGINEER, TO ALTER THIS DOCUMENT IN ANY WAY. IF ALTERED, THE ALTERING PERSON SHALL COMPLY WITH THE REQUIREMENTS OF NEW YORK EDUCATION, LAW, SECTION, 7209.2."

NEW YORK CITY ENVIRONMENTAL PROTECTION
BUREAU OF ENGINEERING DESIGN & CONSTRUCTION
96-05 HORACE HARDING EXPRESSWAY 5th FLOOR
CORONA, NEW YORK 11368
www.nyc.gov/dep

CAPITAL PROJECT WP-282
STATEN ISLAND, NY, OAKWOOD BEACH WRRF
CONTRACT OB-144A

MICROSTRAINER BUILDING
DEMOLITION PLAN

DATE: OCTOBER 2026
SHEET NO: 40 OF 74
DRAWING NO. DE-003.00

Last Saved By & Date: ZALBER, Wednesday, September 09, 2026 and Date Plotted: Wednesday, September 30, 2026 Time: 10:54 AM
Paper Size: ANSI A (8.50 x 11.00 Inches) Plot Scale: 0.38686 3 Plot Style Table: (N)_BEDC_BW.ctb
Drawing Name: & Location: C:\SAVIN\08-144A\BID\DE-003.00.dwg

All inquiries regarding this drawing(s) or project should be made to NYC Environmental Protection, Bureau of Engineering Design and Construction.

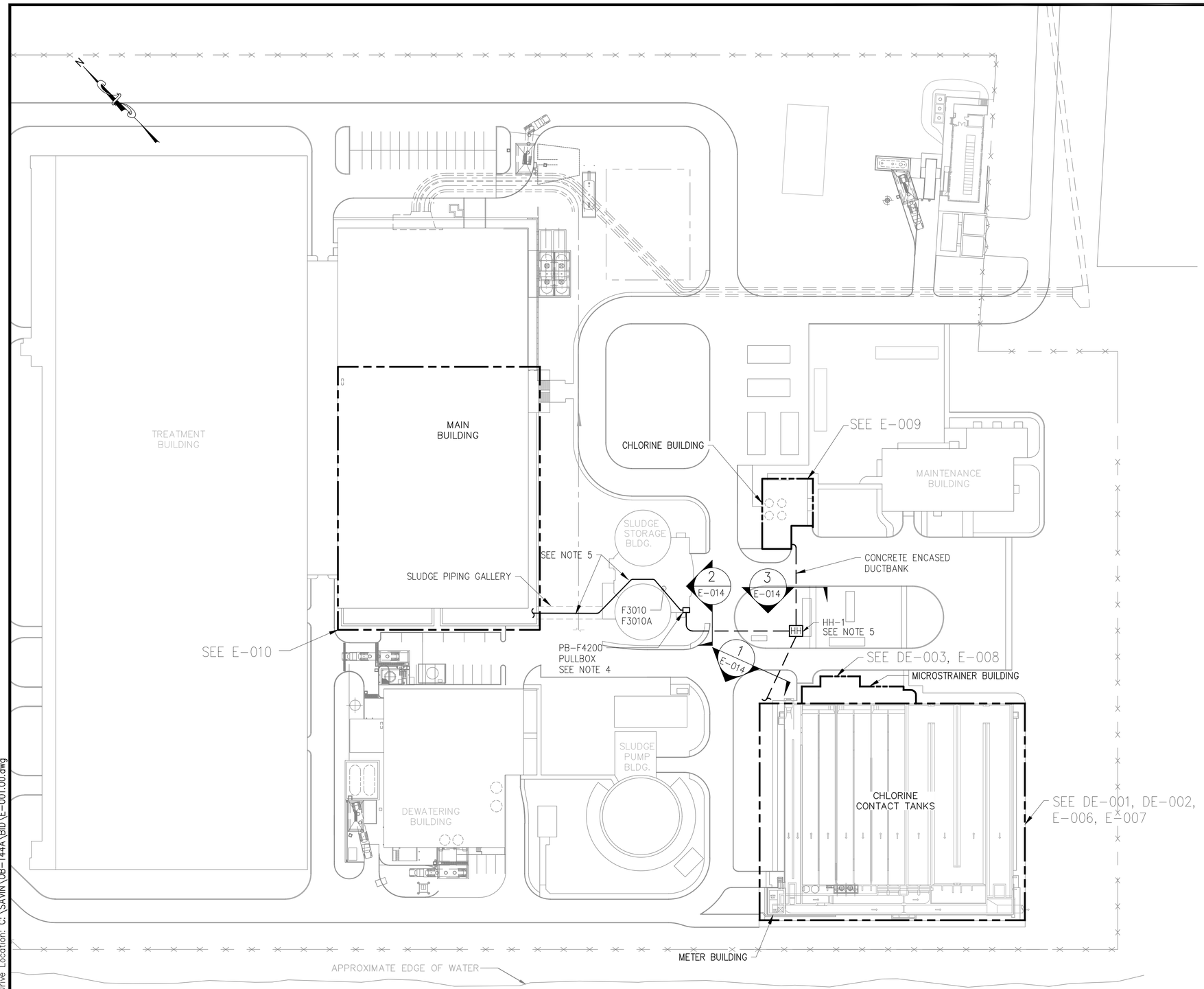

NOTES:

1. SEE GE-001 & GE-002 FOR ELECTRICAL NOTES, SYMBOLS & ABBREVIATIONS.
2. FOR DUCTBANK SECTIONS AND SCHEDULE, SEE E-014.
3. PRIOR TO ANY WORK BEING PERFORMED, CONTRACTOR SHALL FIELD VERIFY ALL LOCATIONS OF EXISTING EQUIPMENT, JUNCTION BOXES, DUCTBANKS, CONDUITS, UNDERGROUND UTILITIES, ETC. THAT REQUIRE MODIFICATIONS AND DETERMINE PROPER ALLOCATION FOR NEW CONSTRUCTION. SEE CIVIL DRAWINGS FOR UNDERGROUND UTILITIES.
4. WALL MOUNT PULLBOX PB-F4200 IN SLUDGE STORAGE BUILDING BASEMENT.
5. ROUTE CONDUITS THROUGH THE SLUDGE STORAGE BUILDING BASEMENT AND THROUGH THE SLUDGE PIPING GALLERY INTO THE MAIN BUILDING BASEMENT.
6. PROVIDE BARRIERS IN HANDHOLE HH-1 TO SEPARATE SIGNAL/NETWORK WIRING FROM POWER AND CONTROL WIRING.

1"=50' 0 50 100 FT.

BID SET

SUBMITTAL DATE: 10/2026

GRAPHIC SCALES CHECK BEFORE USE

IF SHEET IS LESS THAN 22" X 34" IT IS A REDUCED PRINT. SCALE ACCORDINGLY

NO.	DATE	REVISIONS/DESCRIPTION	APPR'D.

DESIGNED BY: DP
DRAWN BY: KC
CHECKED BY: DF
DESIGN LEAD: DAVID FREDERICKS, PE
PROJECT MANAGER: FRANK VISINGARDI JR., PE

Savin Engineers, P.C.

STATE OF NEW YORK · DAVID G. FREDERICKS · 086076 · LICENSED PROFESSIONAL ENGINEER

Environmental Protection

ACCOUNTABLE MANAGER: STELLA UWAECHIE
PORTFOLIO MANAGER: ANDREW NG, P.E.
EXECUTIVE DIRECTOR: KENNETH E. MORIARTY, P.E.

"WARNING-IT IS A VIOLATION, OF THE NEW YORK STATE EDUCATION LAW, SECTION, 7209.2, FOR ANY PERSON, UNLESS (S)HE IS ACTING UNDER THE DIRECTION OF A LICENSED PROFESSIONAL ENGINEER, TO ALTER THIS DOCUMENT IN ANY WAY. IF ALTERED, THE ALTERING PERSON SHALL COMPLY WITH THE REQUIREMENTS OF NEW YORK EDUCATION, LAW, SECTION, 7209.2."

NEW YORK CITY ENVIRONMENTAL PROTECTION
BUREAU OF ENGINEERING DESIGN & CONSTRUCTION
96-05 HORACE HARDING EXPRESSWAY 5th FLOOR
CORONA, NEW YORK 11368
www.nyc.gov/dep

CAPITAL PROJECT WP-282
STATEN ISLAND, NY, OAKWOOD BEACH WRRF
CONTRACT OB-144A
SITE PLAN

DATE: OCTOBER 2026
SHEET NO: 41 OF 74
DRAWING NO. E-001.00

All inquiries regarding this drawing(s) or project should be made to NYC Environmental Protection, Bureau of Engineering Design and Construction.

Last Saved By:ZALBER Last Date Saved:9/9/2026 10:55 AM Date & Time Plotted: 9/30/2026 9:25 AM
Paper Size Printed/Plotted: ANSI full bleed D (34.00 x 22.00 Inches) Plot Scale:1:1 Plot Style Table: DEP_BEDC_22x34_ByWeight.ctb
Drawing File Name & Drive Location: C:\SAVIN\OB-144A\BID\E-001.00.dwg

TAG	AREA	CODE REFERENCE	ELEC. CLASSIFICATION	NOTES
A	MAIN BUILDING FIRST FLOOR CONTROL ROOM	N/A	UNCLASSIFIED	DRY, NEMA 12
B	MAIN BUILDING BASEMENT LEVEL	NFPA 820 TABLE 6.2.2 (a)	CLASS I, DIV 1	WET, CORROSIVE, NEMA 7, XP
C	CHLORINE CONTACT TANKS	N/A	UNCLASSIFIED	WET, CORROSIVE, NEMA 4X, 316SS
D	CHLORINE BUILDING	N/A	UNCLASSIFIED	WET, CORROSIVE, NEMA 4X, FRP
E	METER BUILDING	N/A	UNCLASSIFIED	WET, CORROSIVE, NEMA 4X, 316SS
F	SLUDGE STORAGE TANK BUILDING BASEMENT & SLUDGE PIPE GALLERY	NFPA 820 TABLE 6.2.2 (a)	CLASS I, DIV 1	WET, CORROSIVE, NEMA 7, XP
G	MICROSTRAINER BUILDING	N/A	UNCLASSIFIED	WET, CORROSIVE, NEMA 4X, 316SS
H	ELECTRICAL ROOM	N/A	UNCLASSIFIED	DRY, NEMA 12

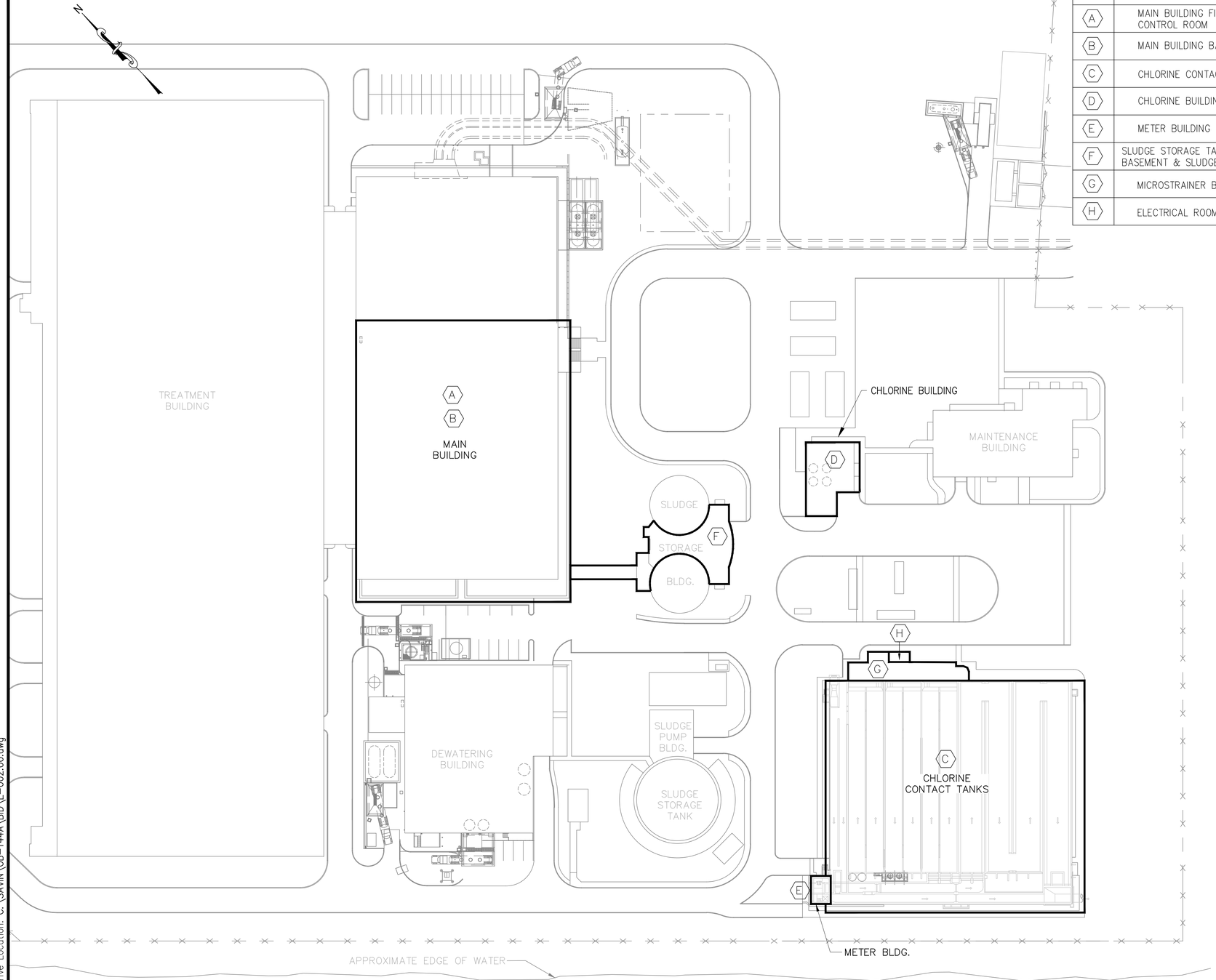

NOTES:

1. SEE GE-001 & GE-002 FOR ELECTRICAL NOTES, SYMBOLS & ABBREVIATIONS.
2. ALL OUTDOOR AREAS SHALL BE CONSIDERED WET AND CORROSIVE. ALL ELECTRICAL AND CONTROL ENCLOSURES SHALL BE NEMA 4X, TYPE 316 STAINLESS STEEL.

1"=50' 0 50 100 FT.

BID SET

SUBMITTAL DATE: 10/2026

GRAPHIC SCALES CHECK BEFORE USE

IF SHEET IS LESS THAN 22" X 34" IT IS A REDUCED PRINT. SCALE ACCORDINGLY

NO.	DATE	REVISIONS/DESCRIPTION	APPR'D.

DESIGNED BY: DP
DRAWN BY: KC
CHECKED BY: DF
DESIGN LEAD: DAVID FREDERICKS, PE
PROJECT MANAGER: FRANK VISINGARDI JR., PE

Savin Engineers, P.C.

STATE OF NEW YORK · DAVID G. FREDERICKS · 086076 · LICENSED PROFESSIONAL ENGINEER

NYC Environmental Protection

ACCOUNTABLE MANAGER: STELLA UWAECHIE
PORTFOLIO MANAGER: ANDREW NG, P.E.
EXECUTIVE DIRECTOR: KENNETH E. MORIARTY, P.E.

"WARNING-IT IS A VIOLATION, OF THE NEW YORK STATE EDUCATION LAW, SECTION, 7209.2, FOR ANY PERSON, UNLESS (S)HE IS ACTING UNDER THE DIRECTION OF A LICENSED PROFESSIONAL ENGINEER, TO ALTER THIS DOCUMENT IN ANY WAY. IF ALTERED, THE ALTERING PERSON SHALL COMPLY WITH THE REQUIREMENTS OF NEW YORK EDUCATION, LAW, SECTION, 7209.2."

NEW YORK CITY ENVIRONMENTAL PROTECTION
BUREAU OF ENGINEERING DESIGN & CONSTRUCTION
96-05 HORACE HARDING EXPRESSWAY 5th FLOOR
CORONA, NEW YORK 11368
www.nyc.gov/dep

CAPITAL PROJECT WP-282
STATEN ISLAND, NY, OAKWOOD BEACH WRRF
CONTRACT OB-144A
AREA CLASSIFICATION PLAN

DATE: OCTOBER 2026
SHEET NO: 42 OF 74
DRAWING NO. E-002.00

All inquiries regarding this drawing(s) or project should be made to NYC Environmental Protection, Bureau of Engineering Design and Construction.

Last Saved By:ZALBER Last Date Saved:9/9/2026 10:56 AM Date & Time Plotted: 9/30/2026 9:25 AM
Paper Size Printed/Plotted: ANSI full bleed D (34.00 x 22.00 Inches) Plot Scale:1:1 Plot Style Table: DEP_BEDC_22x34_ByWeight.ctb
Drawing File Name & Drive Location: C:\SAVIN\OB-144A\BID\E-002.00.dwg

NOTE:

1. SEE GE-001 & GE-002 FOR ELECTRICAL NOTES, SYMBOLS & ABBREVIATIONS.

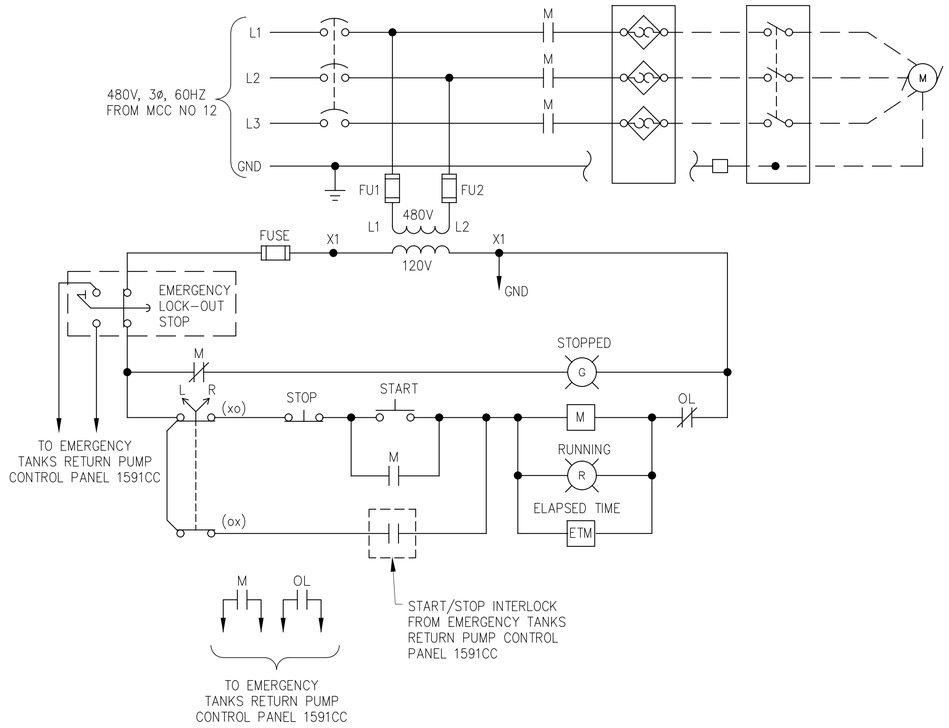

EMERGENCY TANKS RETURN PUMP 037.BQ01.01 & 037.BQ01.02 STARTER CONTROL SCHEMATIC IN MCC NO 12

SCALE: N.T.S.

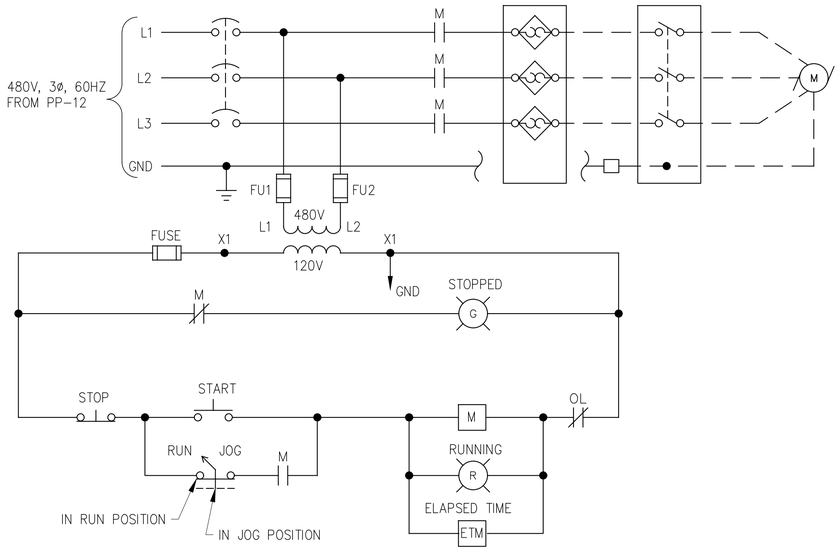

SUMP PUMP 4205C0/4205CM COMBINATION STARTER CONTROL SCHEMATIC

SCALE: N.T.S.

BID SET

SUBMITTAL DATE: 10/2026

GRAPHIC SCALES CHECK BEFORE USE

IF SHEET IS LESS THAN 22" X 34" IT IS A REDUCED PRINT. SCALE ACCORDINGLY

NO.	DATE	REVISIONS/DESCRIPTION	APPR'D.

DESIGNED BY: DP
DRAWN BY: KC
CHECKED BY: DF
DESIGN LEAD: DAVID FREDERICKS, PE
PROJECT MANAGER: FRANK VISINGARDI JR., PE

Savin Engineers, P.C.

Environmental Protection

ACCOUNTABLE MANAGER: STELLA UWAECHIE
PORTFOLIO MANAGER: ANDREW NG, P.E.
EXECUTIVE DIRECTOR: KENNETH E. MORIARTY, P.E.

"WARNING-IT IS A VIOLATION, OF THE NEW YORK STATE EDUCATION LAW, SECTION, 7209.2, FOR ANY PERSON, UNLESS (S)HE IS ACTING UNDER THE DIRECTION OF A LICENSED PROFESSIONAL ENGINEER, TO ALTER THIS DOCUMENT IN ANY WAY. IF ALTERED, THE ALTERING PERSON SHALL COMPLY WITH THE REQUIREMENTS OF NEW YORK EDUCATION, LAW, SECTION, 7209.2."

NEW YORK CITY ENVIRONMENTAL PROTECTION
BUREAU OF ENGINEERING DESIGN & CONSTRUCTION
96-05 HORACE HARDING EXPRESSWAY 5th FLOOR
CORONA, NEW YORK 11368
www.nyc.gov/dep

CAPITAL PROJECT WP-282
STATEN ISLAND, NY, OAKWOOD BEACH WRRF
CONTRACT OB-144A
CONTROL WIRING DIAGRAMS

DATE: OCTOBER 2026
SHEET NO: 43 OF 74
DRAWING NO. E-003.00

Last Saved By & Date: ZALBER, Wednesday, September 09, 2026 and Date Plotted: Wednesday, September 30, 2026 Time: 11:13 AM
Paper Size: ANSI A (8.50 x 11.00 Inches) Plot Scale: 0.386863 Plot Style Table: (N)_BEDC_BW.ctb
Drawing Name: & Location: C:\SAVIN\08-144A\BID\E-003.00.dwg

All inquiries regarding this drawing(s) or project should be made to NYC Environmental Protection, Bureau of Engineering Design and Construction.

NOTES:

1. SEE GE-001 & GE-002 FOR ELECTRICAL NOTES, SYMBOLS & ABBREVIATIONS.
2. CONTRACTOR SHALL COORDINATE ALL SHUTDOWNS WITH THE PLANT.
3. EXISTING MCC IS BY SIEMENS TIASTAR. NEW STARTER AND CIRCUIT BREAKER BUCKETS SHALL BE COMPATIBLE WITH THE EXISTING EQUIPMENT.
4. EXISTING BREAKERS SHALL BE REMOVED AND TURNED OVER TO PLANT FOR USE AS SPARE.

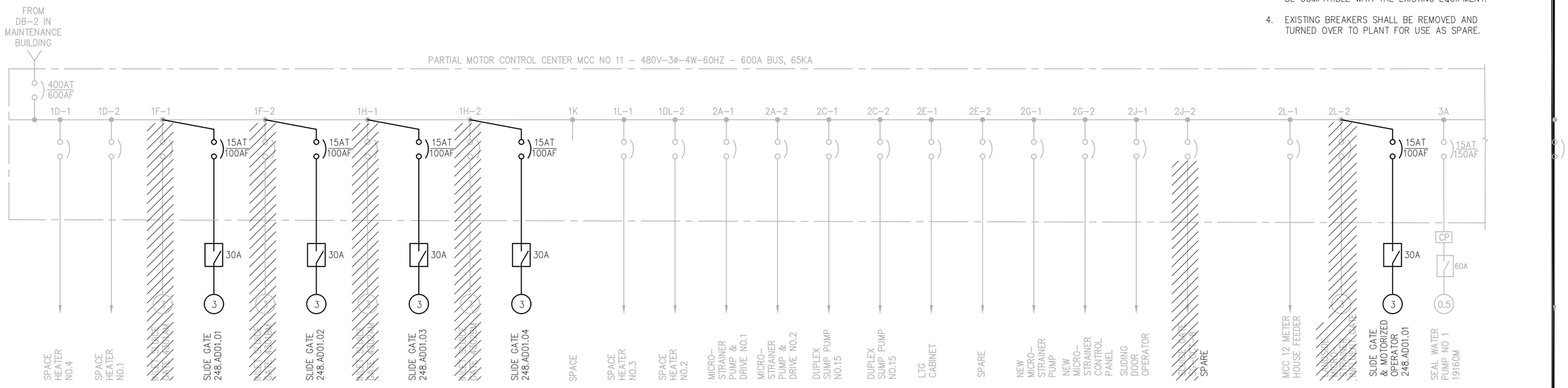

MCC NO 11 PARTIAL SINGLE LINE DIAGRAM – MODIFICATIONS

SCALE: N.T.S.

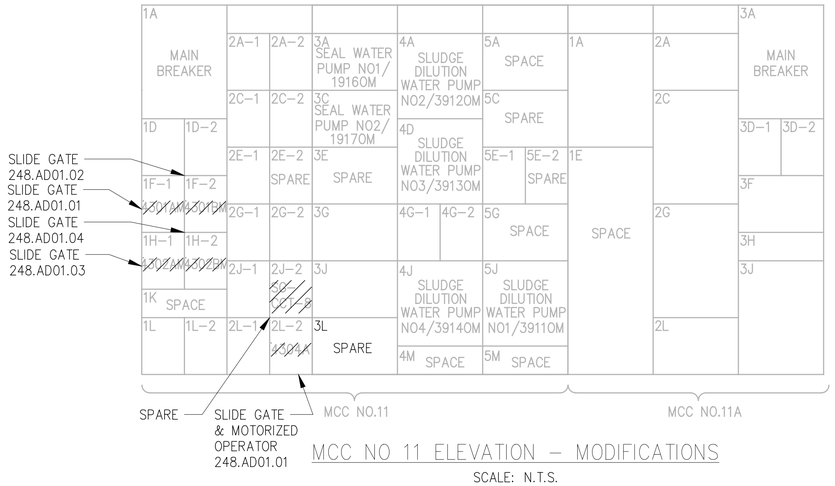

MCC NO 11 ELEVATION – MODIFICATIONS

SCALE: N.T.S.

BID SET

SUBMITTAL DATE: 10/2026

GRAPHIC SCALES CHECK BEFORE USE

IF SHEET IS LESS THAN 22" X 34" IT IS A REDUCED PRINT. SCALE ACCORDINGLY

NO.	DATE	REVISIONS/DESCRIPTION	APPR'D.

DESIGNED BY: DP
DRAWN BY: KC
CHECKED BY: DF
DESIGN LEAD: DAVID FREDERICKS, PE
PROJECT MANAGER: FRANK VISINGARDI JR., PE

Savin Engineers, P.C.

STATE OF NEW YORK DAVID G. FREDERICKS 086076 LICENSED PROFESSIONAL ENGINEER

Environmental Protection

ACCOUNTABLE MANAGER: STELLA UWAECHIE
PORTFOLIO MANAGER: ANDREW NG, P.E.
EXECUTIVE DIRECTOR: KENNETH E. MORIARTY, P.E.

"WARNING-IT IS A VIOLATION, OF THE NEW YORK STATE EDUCATION LAW, SECTION, 7209.2, FOR ANY PERSON, UNLESS (S)HE IS ACTING UNDER THE DIRECTION OF A LICENSED PROFESSIONAL ENGINEER, TO ALTER THIS DOCUMENT IN ANY WAY. IF ALTERED, THE ALTERING PERSON SHALL COMPLY WITH THE REQUIREMENTS OF NEW YORK EDUCATION, LAW, SECTION, 7209.2."

NEW YORK CITY ENVIRONMENTAL PROTECTION
BUREAU OF ENGINEERING DESIGN & CONSTRUCTION
96-05 HORACE HARDING EXPRESSWAY 5th FLOOR
CORONA, NEW YORK 11368
www.nyc.gov/dep

CAPITAL PROJECT WP-282
STATEN ISLAND, NY, OAKWOOD BEACH WRRF
CONTRACT OB-144A
MCC NO 11
SINGLE LINE DIAGRAM AND ELEVATION MODIFICATIONS

DATE: OCTOBER 2026
SHEET NO: 44 OF 74
DRAWING NO. E-004.00

Last Saved By & Date: ZALBER, Wednesday, September 09, 2026 and Date Plotted: Wednesday, September 30, 2026 Time: 11:16 AM
Paper Size: ANSI A (8.50 x 11.00 Inches) Plot Scale: 0.386863 Plot Style Table: (N)_BEDC_BW.ctb
Drawing Name: & Location: C:\SAVIN\OB-144A\BID\E-004.00.dwg

All inquiries regarding this drawing(s) or project should be made to NYC Environmental Protection, Bureau of Engineering Design and Construction.

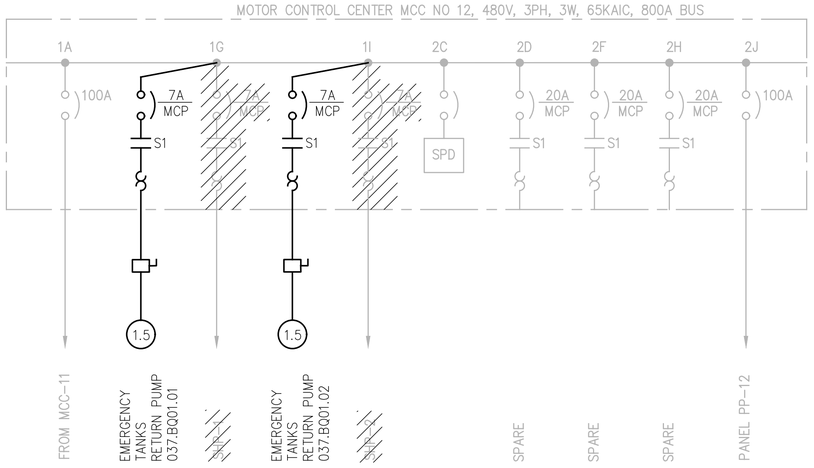

MCC NO 12 SINGLE LINE DIAGRAM – MODIFICATIONS

SCALE: N.T.S.

NOTES:

1. SEE GE-001 & GE-002 FOR ELECTRICAL NOTES, SYMBOLS & ABBREVIATIONS.
2. CONTRACTOR SHALL COORDINATE ALL SHUTDOWNS WITH THE PLANT.
3. EXISTING STARTER SHALL BE REMOVED AND TURNED OVER TO PLANT FOR USE AS SPARE.
4. EXISTING MCC IS BY SIEMENS TIASTAR. NEW STARTER AND CIRCUIT BREAKER BUCKETS SHALL BE COMPATIBLE WITH THE EXISTING EQUIPMENT.

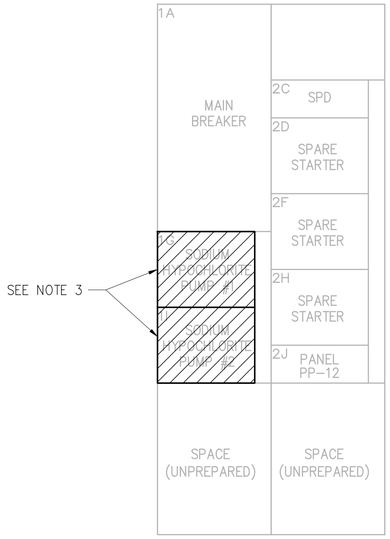

EXISTING MCC NO 12 ELEVATION – REMOVALS

SCALE: N.T.S.

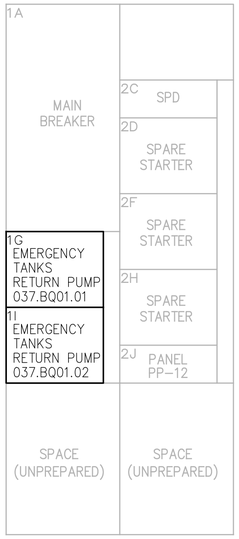

EXISTING MCC NO 12 ELEVATION – MODIFICATIONS

SCALE: N.T.S.

BID SET

SUBMITTAL DATE: 10/2026

GRAPHIC SCALES CHECK BEFORE USE

IF SHEET IS LESS THAN 22" X 34" IT IS A REDUCED PRINT. SCALE ACCORDINGLY

NO.	DATE	REVISIONS/DESCRIPTION	APPR'D.

DESIGNED BY: DP
DRAWN BY: KC
CHECKED BY: DF
DESIGN LEAD: DAVID FREDERICKS, PE
PROJECT MANAGER: FRANK VISINGARDI JR., PE

Savin Engineers, P.C.

STATE OF NEW YORK · DAVID S. FREDERICKS · 086076 · LICENSED PROFESSIONAL ENGINEER

Environmental Protection

ACCOUNTABLE MANAGER
STELLA UWAECHIE

PORTFOLIO MANAGER
ANDREW NG, P.E.

EXECUTIVE DIRECTOR
KENNETH E. MORIARTY, P.E.

"WARNING-IT IS A VIOLATION, OF THE NEW YORK STATE EDUCATION LAW, SECTION, 7209.2, FOR ANY PERSON, UNLESS (S)HE IS ACTING UNDER THE DIRECTION OF A LICENSED PROFESSIONAL ENGINEER, TO ALTER THIS DOCUMENT IN ANY WAY, IF ALTERED, THE ALTERING PERSON SHALL COMPLY WITH THE REQUIREMENTS OF NEW YORK EDUCATION, LAW, SECTION, 7209.2."

NEW YORK CITY ENVIRONMENTAL PROTECTION
BUREAU OF ENGINEERING DESIGN & CONSTRUCTION
96-05 HORACE HARDING EXPRESSWAY 5th FLOOR
CORONA, NEW YORK 11368
www.nyc.gov/dep

CAPITAL PROJECT WP-282
STATEN ISLAND, NY, OAKWOOD BEACH WRRF
CONTRACT OB-144A
MCC NO 12
SINGLE LINE DIAGRAM AND ELEVATION MODIFICATIONS

DATE: OCTOBER 2026
SHEET NO: 45 OF 74
DRAWING NO. E-005.00

Last Saved By & Date: ZALBER, Wednesday, September 09, 2026 and Date Plotted: Wednesday, September 30, 2026 Time: 11:17 AM
Paper Size: ANSI A (8.50 x 11.00 Inches) Plot Scale: 0.386863 Plot Style Table: (N)_BEDC_BW.ctb
Drawing Name: & Location: C:\SAVIN\08-144A\BID\E-005.00.dwg

All inquiries regarding this drawing(s) or project should be made to NYC Environmental Protection, Bureau of Engineering Design and Construction.

NOTE:

1. SEE GE-001 & GE-002 FOR ELECTRICAL NOTES, SYMBOLS & ABBREVIATIONS.

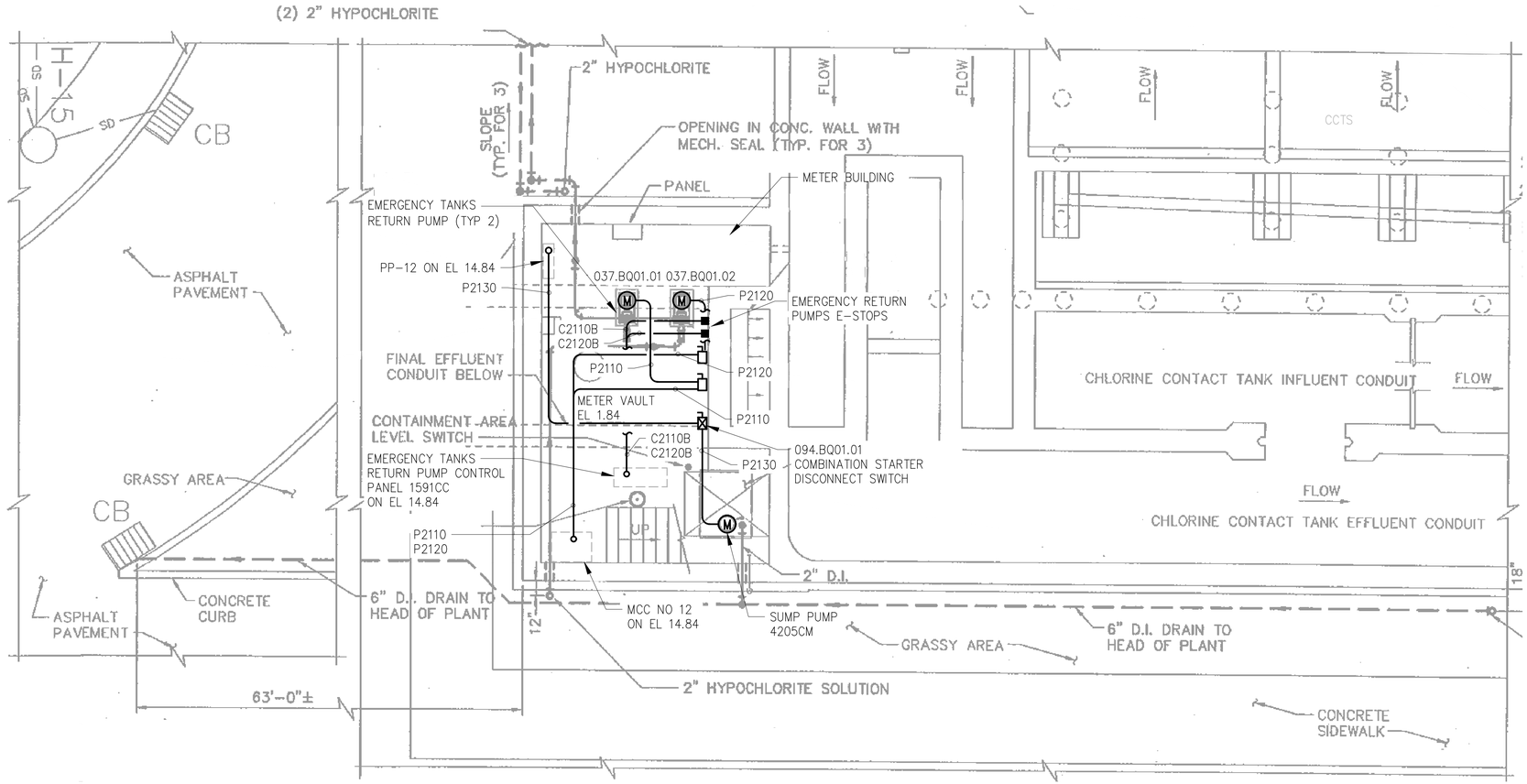

METER BUILDING – POWER PLAN AT EL 1.84

SCALE: N.T.S.

BID SET

SUBMITTAL DATE: 10/2026

GRAPHIC SCALES CHECK BEFORE USE

IF SHEET IS LESS THAN 22" X 34" IT IS A REDUCED PRINT. SCALE ACCORDINGLY

NO.	DATE	REVISIONS/DESCRIPTION	APPR'D.

DESIGNED BY: DP
DRAWN BY: KC
CHECKED BY: DF
DESIGN LEAD: DAVID FREDERICKS, PE
PROJECT MANAGER: FRANK VISINGARDI JR., PE

Savin Engineers, P.C.

STATE OF NEW YORK DAVID G. FREDERICKS 086076 LICENSED PROFESSIONAL ENGINEER

Environmental Protection

ACCOUNTABLE MANAGER: STELLA UWAECHIE
PORTFOLIO MANAGER: ANDREW NG, P.E.
EXECUTIVE DIRECTOR: KENNETH E. MORIARTY, P.E.

"WARNING-IT IS A VIOLATION, OF THE NEW YORK STATE EDUCATION LAW, SECTION, 7209.2, FOR ANY PERSON, UNLESS (S)HE IS ACTING UNDER THE DIRECTION OF A LICENSED PROFESSIONAL ENGINEER, TO ALTER THIS DOCUMENT IN ANY WAY. IF ALTERED, THE ALTERING PERSON SHALL COMPLY WITH THE REQUIREMENTS OF NEW YORK EDUCATION, LAW, SECTION, 7209.2."

NEW YORK CITY ENVIRONMENTAL PROTECTION
BUREAU OF ENGINEERING DESIGN & CONSTRUCTION
96-05 HORACE HARDING EXPRESSWAY 5th FLOOR
CORONA, NEW YORK 11368
www.nyc.gov/dep

CAPITAL PROJECT WP-282
STATEN ISLAND, NY, OAKWOOD BEACH WRRF
CONTRACT OB-144A

METER BUILDING
POWER PLAN AT EL 1.84

DATE: OCTOBER 2026
SHEET NO: 46 OF 74
DRAWING NO. E-006.00

Last Saved By & Date: ZALBER, Wednesday, September 09, 2026 and Date Plotted: Wednesday, September 30, 2026 Time: 11:18 AM
Paper Size: ANSI A (8.50 x 11.00 Inches) Plot Scale: 0.386863 Plot Style Table: (N)_BEDC_BW.ctb
Drawing Name: & Location: C:\SAVIN\OB-144A\BID\E-006.00.dwg

All inquiries regarding this drawing(s) or project should be made to NYC Environmental Protection, Bureau of Engineering Design and Construction.

NOTES:

1. SEE GE-001 & GE-002 FOR ELECTRICAL NOTES, SYMBOLS & ABBREVIATIONS.
2. PROVIDE UL LISTED PIN AND SLEEVE SWITCHED AND INTERLOCKED WEATHERPROOF RECEPTACLE RATED NEMA 4X (NON-METALLIC). RECEPTACLE SHALL BE BY MENNEKES MODEL "ME 330M14" WITH CORRESPONDING MATING PLUG "ME 330P4W" OR APPROVED EQUAL. POWER SHALL BE DERIVED FROM MPC-4 IN THE METER BUILDING..
3. PROVIDE BARRIERS IN PULLBOXES PB-P4200A AND PB-S4200A.
4. BOND MINI POWER CENTER TRANSFORMER TO BUILDING GROUNDING SYSTEM.

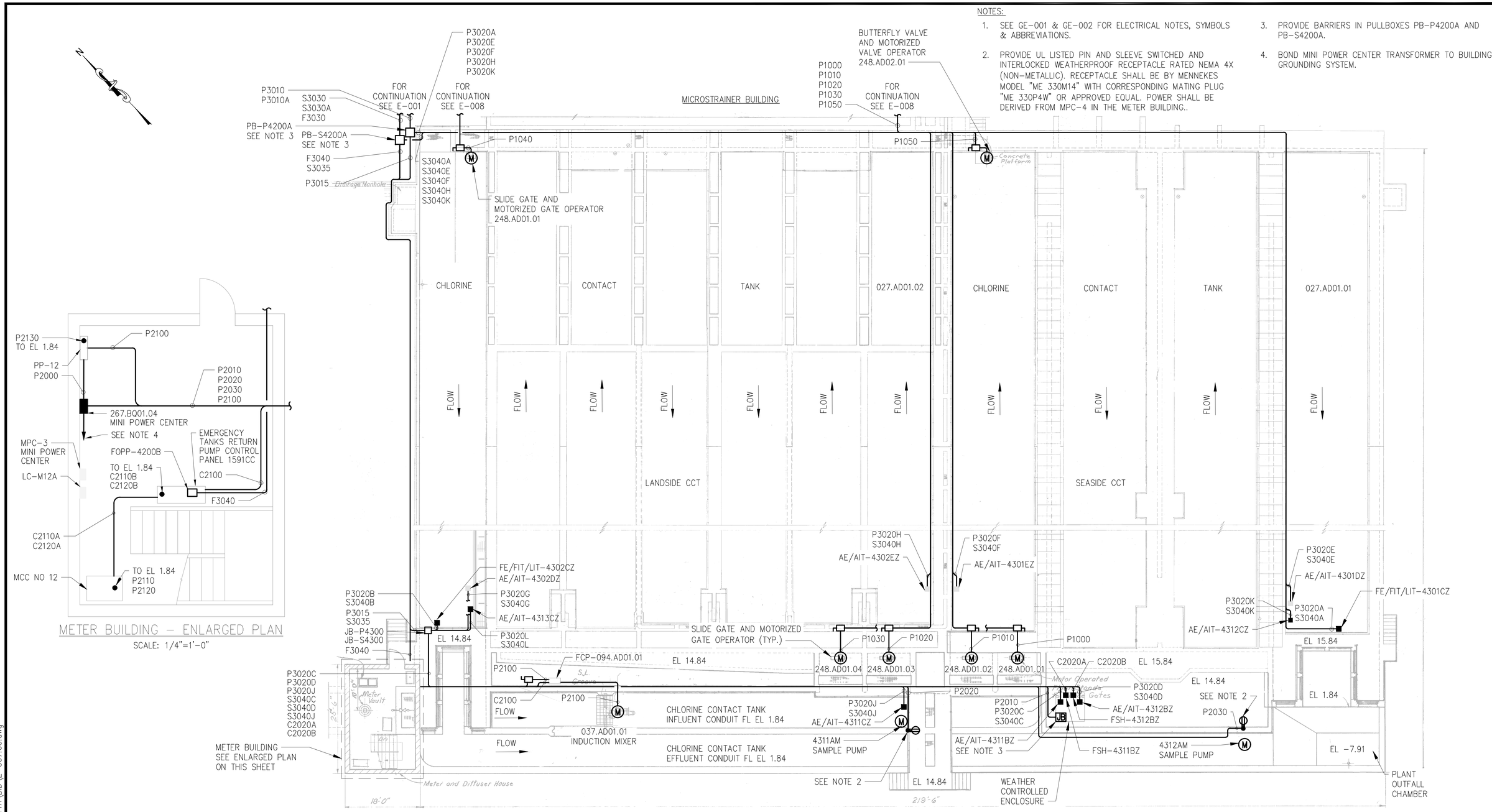

METER BUILDING - ENLARGED PLAN

SCALE: 1/4"=1'-0"

METER BUILDING AND CHLORINE CONTACT TANKS - POWER PLAN AT EL 15.84

SCALE: N.T.S.

BID SET

SUBMITTAL DATE: 10/2026

GRAPHIC SCALES CHECK BEFORE USE

IF SHEET IS LESS THAN 22" X 34" IT IS A REDUCED PRINT. SCALE ACCORDINGLY

NO.	DATE	REVISIONS/DESCRIPTION	APPR'D.

DESIGNED BY: DP | DRAWN BY: KC | CHECKED BY: DF | DESIGN LEAD: DAVID FREDERICKS, PE | PROJECT MANAGER: FRANK VISINGARDI JR., PE

Savin Engineers, P.C.

STATE OF NEW YORK DAVID G. FREDERICKS 086076 LICENSED PROFESSIONAL ENGINEER

Environmental Protection

ACCOUNTABLE MANAGER: STELLA UWAECHIE
PORTFOLIO MANAGER: ANDREW NG, P.E.
EXECUTIVE DIRECTOR: KENNETH E. MORIARTY, P.E.

"WARNING-IT IS A VIOLATION, OF THE NEW YORK STATE EDUCATION LAW, SECTION, 7209.2, FOR ANY PERSON, UNLESS (S)HE IS ACTING UNDER THE DIRECTION OF A LICENSED PROFESSIONAL ENGINEER, TO ALTER THIS DOCUMENT IN ANY WAY. IF ALTERED, THE ALTERING PERSON SHALL COMPLY WITH THE REQUIREMENTS OF NEW YORK EDUCATION, LAW, SECTION, 7209.2."

NEW YORK CITY ENVIRONMENTAL PROTECTION
BUREAU OF ENGINEERING DESIGN & CONSTRUCTION
96-05 HORACE HARDING EXPRESSWAY 5th FLOOR
CORONA, NEW YORK 11368
www.nyc.gov/dep

CAPITAL PROJECT WP-282
STATEN ISLAND, NY, OAKWOOD BEACH WRRF
CONTRACT OB-144A
METER BUILDING AND CHLORINE CONTACT TANKS
POWER PLAN AT EL 15.84

DATE: OCTOBER 2026
SHEET NO: 47 OF 74
DRAWING NO. E-007.00

Last Saved By & Date:Kichen, Wednesday, September 30, 2026 and Date Plotted:Wednesday, September 30, 2026 Time: 8:56 AM
Paper Size:ANSI A (8.50 x 11.00 Inches) Plot Scale:0.386863 Plot Style Table:(N)_BEDC_BW.ctb
Drawing Name: & Location:C:\SAVIN\OB-144A\BID\E-007.00.dwg

All inquiries regarding this drawing(s) or project should be made to NYC Environmental Protection, Bureau of Engineering Design and Construction.

NOTES:

1. SEE GE-001 & GE-002 FOR ELECTRICAL NOTES, SYMBOLS & ABBREVIATIONS.

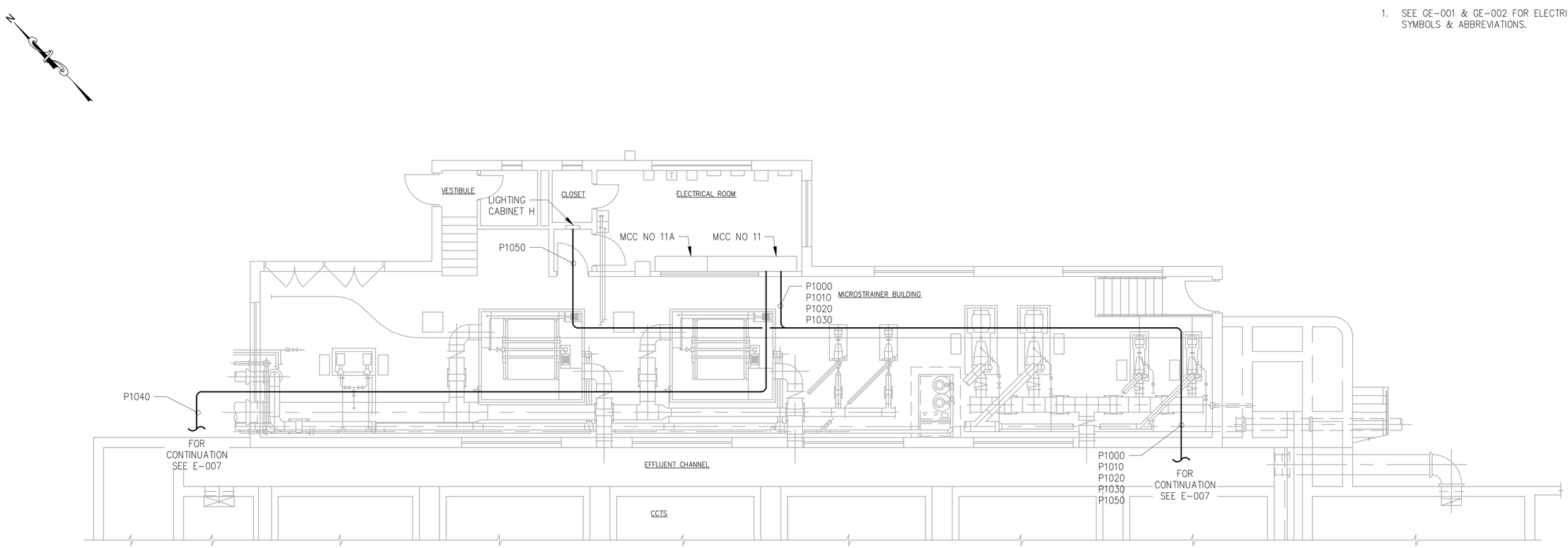

MICROSTRAINER BUILDING – POWER PLAN

SCALE: 3/16"=1'-0"

0 5 10 FT.
3/16"=1'-0"

BID SET

SUBMITTAL DATE: 10/2026

GRAPHIC SCALES CHECK BEFORE USE

IF SHEET IS LESS THAN 22" X 34" IT IS A REDUCED PRINT. SCALE ACCORDINGLY

NO.	DATE	REVISIONS/DESCRIPTION	APPR'D.

DESIGNED BY: DP
DRAWN BY: KC
CHECKED BY: DF
DESIGN LEAD: DAVID FREDERICKS, PE
PROJECT MANAGER: FRANK VISINGARDI JR., PE

Savin Engineers, P.C.

STATE OF NEW YORK · DAVID G. FREDERICKS · 086076 · LICENSED PROFESSIONAL ENGINEER

Environmental Protection

ACCOUNTABLE MANAGER
STELLA UWAECHIE

PORTFOLIO MANAGER
ANDREW NG, P.E.

EXECUTIVE DIRECTOR
KENNETH E. MORIARTY, P.E.

"WARNING-IT IS A VIOLATION, OF THE NEW YORK STATE EDUCATION LAW, SECTION, 7209.2, FOR ANY PERSON, UNLESS (S)HE IS ACTING UNDER THE DIRECTION OF A LICENSED PROFESSIONAL ENGINEER, TO ALTER THIS DOCUMENT IN ANY WAY. IF ALTERED, THE ALTERING PERSON SHALL COMPLY WITH THE REQUIREMENTS OF NEW YORK EDUCATION, LAW, SECTION, 7209.2."

NEW YORK CITY ENVIRONMENTAL PROTECTION
BUREAU OF ENGINEERING DESIGN & CONSTRUCTION
96-05 HORACE HARDING EXPRESSWAY 5th FLOOR
CORONA, NEW YORK 11368
www.nyc.gov/dep

CAPITAL PROJECT WP-282
STATEN ISLAND, NY, OAKWOOD BEACH WRRF
CONTRACT OB-144A

MICROSTRAINER BUILDING
POWER PLAN

DATE: OCTOBER 2026
SHEET NO: 48 OF 74
DRAWING NO. E-008.00

Last Saved By & Date: ZALBER, Wednesday, September 09, 2026 and Date Plotted: Wednesday, September 30, 2026 Time: 11:24 AM
Paper Size: ANSI A (8.50 x 11.00 Inches) Plot Scale: 0.386863 Plot Style Table: (N)_BEDC_BW.ctb
Drawing Name: & Location: C:\SAVIN\08-144A\BID\E-008.00.dwg

All inquiries regarding this drawing(s) or project should be made to NYC Environmental Protection, Bureau of Engineering Design and Construction.

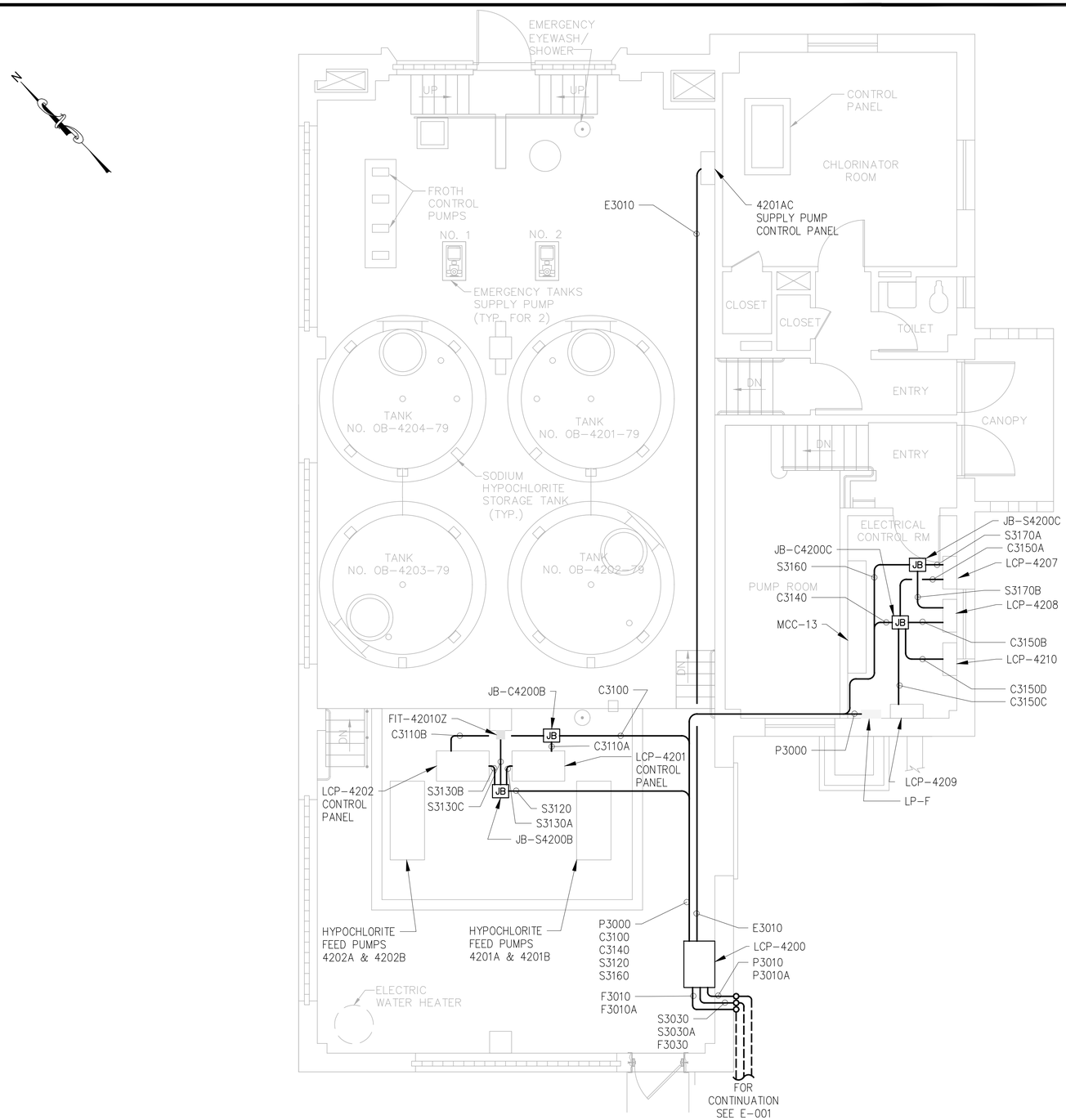

CHLORINE BUILDING POWER PLAN

SCALE: 1/4"=1'-0"

NOTES:

1. SEE GE-001 & GE-002 FOR ELECTRICAL, SYMBOLS AND ABBREVIATIONS.
2. FOR DUCTBANK SECTIONS AND SCHEDULE SEE E-014.

1/4"=1'-0" 0 4 8 FT.

BID SET

SUBMITTAL DATE: 10/2026

GRAPHIC SCALES CHECK BEFORE USE

IF SHEET IS LESS THAN 22" X 34" IT IS A REDUCED PRINT. SCALE ACCORDINGLY

NO.	DATE	REVISIONS/DESCRIPTION	APPR'D.

DESIGNED BY: DP
DRAWN BY: KC
CHECKED BY: DF
DESIGN LEAD: DAVID FREDERICKS, PE
PROJECT MANAGER: FRANK VISINGARDI JR., PE

Savin Engineers, P.C.

DAVID S. FREDERICKS 086076 LICENSED PROFESSIONAL ENGINEER

Environmental Protection

ACCOUNTABLE MANAGER: STELLA UWAECHIE
PORTFOLIO MANAGER: ANDREW NG, P.E.
EXECUTIVE DIRECTOR: KENNETH E. MORIARTY, P.E.

"WARNING-IT IS A VIOLATION, OF THE NEW YORK STATE EDUCATION LAW, SECTION, 7209.2, FOR ANY PERSON, UNLESS (S)HE IS ACTING UNDER THE DIRECTION OF A LICENSED PROFESSIONAL ENGINEER, TO ALTER THIS DOCUMENT IN ANY WAY. IF ALTERED, THE ALTERING PERSON SHALL COMPLY WITH THE REQUIREMENTS OF NEW YORK EDUCATION, LAW, SECTION, 7209.2."

NEW YORK CITY ENVIRONMENTAL PROTECTION
BUREAU OF ENGINEERING DESIGN & CONSTRUCTION
96-05 HORACE HARDING EXPRESSWAY 5th FLOOR
CORONA, NEW YORK 11368
www.nyc.gov/dep

CAPITAL PROJECT WP-282
STATEN ISLAND, NY, OAKWOOD BEACH WRRF
CONTRACT OB-144A

CHLORINE BUILDING POWER PLAN

DATE: OCTOBER 2026
SHEET NO: 49 OF 74
DRAWING NO. E-009.00

Last Saved By:ZALBER Last Date Saved:9/9/2026 11:25 AM Date & Time Plotted: 9/30/2026 9:26 AM
Paper Size Printed/Plotted: ANSI full bleed D (34.00 x 22.00 Inches) Plot Scale:1:1 Plot Style Table: DEP_BEDC_22x34_ByWeight.ctb
Drawing File Name & Drive Location: C:\SAVIN\OB-144A\BID\E-009.00.dwg

All inquiries regarding this drawing(s) or project should be made to NYC Environmental Protection, Bureau of Engineering Design and Construction.

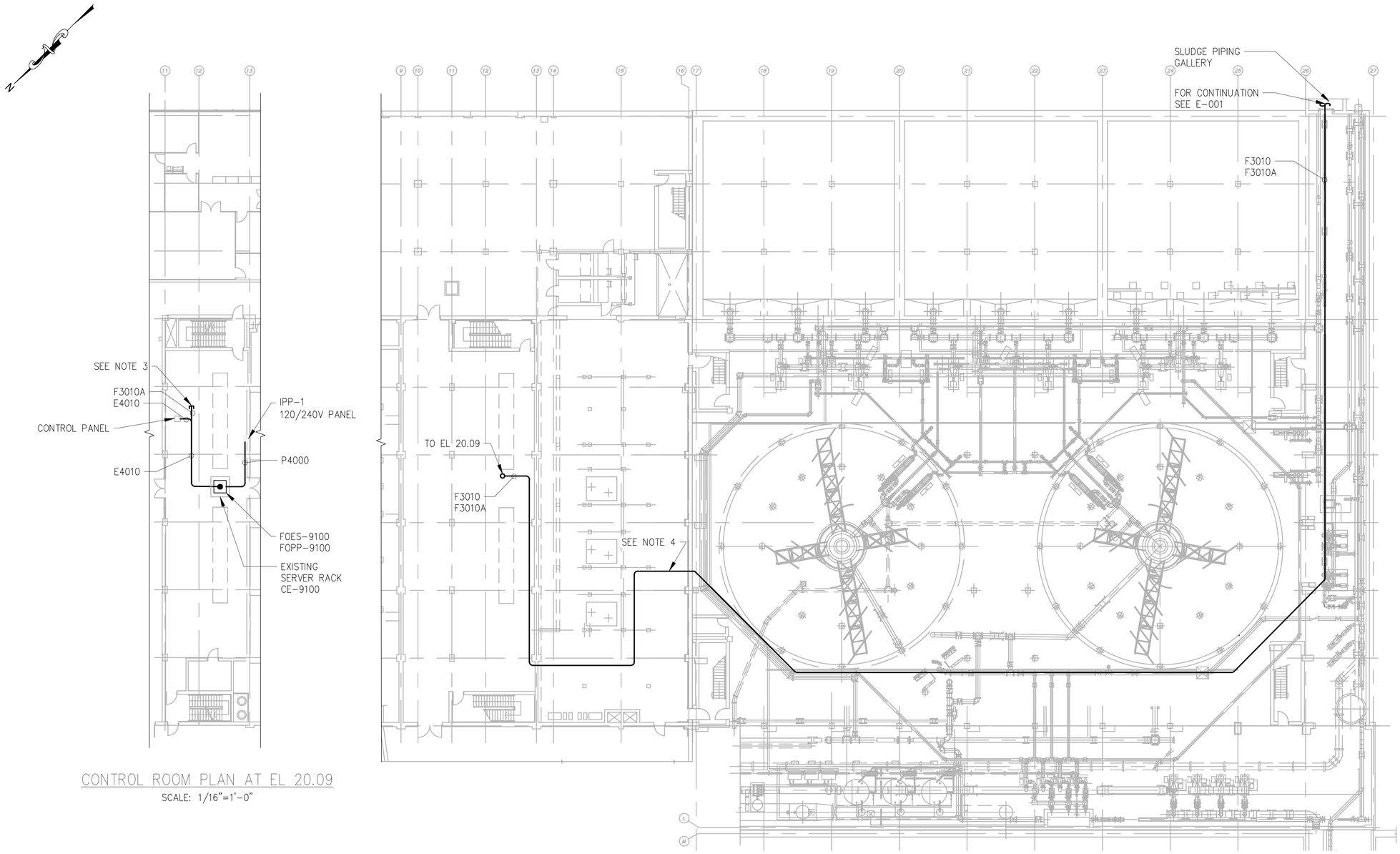

CONTROL ROOM PLAN AT EL 20.09

SCALE: 1/16"=1'-0"

BASEMENT PLAN AT EL 0.59

SCALE: 1/16"=1'-0"

NOTES:

1. SEE GE-001 & GE-002 FOR ELECTRICAL NOTES, SYMBOLS AND ABBREVIATIONS.
2. CONTRACTOR SHALL PROVIDE AND INSTALL NEW COMMUNICATION ENCLOSURE (CE-9100) IN EXISTING SERVER RACK NEXT TO SWITCHGEAR DB-1.
3. SPARE CONDUIT F3010A SHALL BE CAPPED IN THE CONTROL ROOM CEILING.
4. ROUTE CONDUIT PARALLEL TO EXISTING CONDUIT RACK.

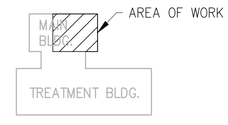

KEY PLAN

1/16"=1'-0" 0 10 20 30 FT.

BID SET

SUBMITTAL DATE: 10/2026

GRAPHIC SCALES CHECK BEFORE USE

IF SHEET IS LESS THAN 22" X 34" IT IS A REDUCED PRINT. SCALE ACCORDINGLY

NO.	DATE	REVISIONS/DESCRIPTION	APPR'D.

DESIGNED BY: DP
DRAWN BY: KC
CHECKED BY: DF
DESIGN LEAD: DAVID FREDERICKS, PE
PROJECT MANAGER: FRANK VISINGARDI JR., PE

Savin Engineers, P.C.

STATE OF NEW YORK · DAVID G. FREDERICKS · 086076 · LICENSED PROFESSIONAL ENGINEER

Environmental Protection

ACCOUNTABLE MANAGER: STELLA UWAECHIE
PORTFOLIO MANAGER: ANDREW NG, P.E.
EXECUTIVE DIRECTOR: KENNETH E. MORIARTY, P.E.

"WARNING-IT IS A VIOLATION, OF THE NEW YORK STATE EDUCATION LAW, SECTION, 7209.2, FOR ANY PERSON, UNLESS (S)HE IS ACTING UNDER THE DIRECTION OF A LICENSED PROFESSIONAL ENGINEER, TO ALTER THIS DOCUMENT IN ANY WAY. IF ALTERED, THE ALTERING PERSON SHALL COMPLY WITH THE REQUIREMENTS OF NEW YORK EDUCATION, LAW, SECTION, 7209.2."

NEW YORK CITY ENVIRONMENTAL PROTECTION
BUREAU OF ENGINEERING DESIGN & CONSTRUCTION
96-05 HORACE HARDING EXPRESSWAY 5th FLOOR
CORONA, NEW YORK 11368
www.nyc.gov/dep

CAPITAL PROJECT WP-282
STATEN ISLAND, NY, OAKWOOD BEACH WRRF
CONTRACT OB-144A
MAIN BUILDING
BASEMENT AND CONTROL ROOM
POWER PLAN

DATE: OCTOBER 2026
SHEET NO: 50 OF 74
DRAWING NO. E-010.00

Last Saved By: ZALBER Last Date Saved: 9/9/2026 11:26 AM Date & Time Plotted: 9/30/2026 9:26 AM
Paper Size Printed/Plotted: ANSI full bleed D (34.00 x 22.00 Inches) Plot Scale: 1:1 Plot Style Table: DEP_BEDC_22x34_ByWeight.ctb
Drawing File Name & Drive Location: C:\SAVIN\OB-144A\BID\E-010.00.dwg

All inquiries regarding this drawing(s) or project should be made to NYC Environmental Protection, Bureau of Engineering Design and Construction.

EXISTING PANELBOARD: PP-12 — **LOCATION:** METER BUILDING

4X **NEMA RATING** — 42 **POLES**

250 **AMP BUS RATING** — 100 **AMP MAIN BREAKER** — 22 **KA SHORT CIRCUIT RATING**

208Y /120 **VOLTS** — 3 **PHASE** 4 **WIRE** — **ELECTRONIC GRADE:** NO

CIRCUIT NO.	DESCRIPTION	LOAD KVA PHASE A	LOAD KVA PHASE B	LOAD KVA PHASE C	BREAKER AMPS/ POLES	NOTES
1	UNIT HEATER 1	■			20/3	
3			■			
5				■		
7	~~DUPLEX SUMP PUMP #16~~ **4205C0/4205CM SUMP PUMP**	■			**20/3**	
9			■			
11				■		
13	LIGHTING TRANSFORMER CABINET M12-A		■		20/3	
15		■				
17				■		
19	SF-6		■		15/3	
21		■				
23				■		
13	SPARE		■		20/3	
15		■				
17				■		
19	SPARE		■		20/3	
21		■				
23				■		
25	SPARE		■		20/3	
27		■				
29				■		
	TOTAL PHASE KVA THIS SIDE					

CIRCUIT NO.	DESCRIPTION	LOAD KVA PHASE A	LOAD KVA PHASE B	LOAD KVA PHASE C	BREAKER AMPS/ POLES	NOTES
2	UNIT HEATER 2	■	■		20/3	
4				■		
6						
8	MINI POWER CENTER 3	■	■		20/3	
10				■		
12						
14	~~CHLORINE MIXER~~ **037.AD01.01 INDUCTION MIXER**		■	■	**30/3**	
16		■				
18						
20	EF-2			■	20/3	
22		■	■			
24						
26	~~SPARE~~ **267.BQ01.04 MINI-POWER CENTER**		■	■	**20/3**	
28		■				
30						
26	SPARE			■	20/3	
28		■	■			
30						
26	SPARE		■	■	20/3	
28		■	■			
30						
	TOTAL PHASE KVA THIS SIDE					
	TOTAL KVA PER PHASE					
	TOTAL THREE PHASE KVA					

EXISTING PANELBOARD: IPP-1 — **LOCATION:** MAIN BUILDING - CONTROL ROOM

12 **NEMA RATING** — 26 **POLES**

100 **AMP BUS RATING** — 30 **AMP MAIN BREAKER** — 22 **KA SHORT CIRCUIT RATING**

208Y /120 **VOLTS** — 3 **PHASE** 4 **WIRE** — **ELECTRONIC GRADE:** NO

CIRCUIT NO.	DESCRIPTION	LOAD KVA PHASE A	LOAD KVA PHASE B	LOAD KVA PHASE C	BREAKER AMPS/ POLES	NOTES
1	EXISTING LOAD		■	■	20/1	
3	EXISTING LOAD	■			20/1	
5	EXISTING LOAD		■	■	20/1	
7	SPARE			■	15/1	
9	SPARE	■	■		15/1	
11	SPARE			■	15/1	
13	BLANK		■	■		
15	BLANK	■				
17	BLANK		■	■		
19	BLANK		■	■		
21	BLANK	■				
23	BLANK		■	■		
25	BLANK		■	■		
	TOTAL PHASE KVA THIS SIDE					

CIRCUIT NO.	DESCRIPTION	LOAD KVA PHASE A	LOAD KVA PHASE B	LOAD KVA PHASE C	BREAKER AMPS/ POLES	NOTES
2	EXISTING LOAD		■	■	20/1	
4	EXISTING LOAD	■			20/1	
6	EXISTING LOAD		■	■	20/1	
8	EXISTING LOAD		■	■	20/2	
10						
12	EXISTING LOAD		■	■	15/1	
14	BLANK			■		
16	BLANK		■	■		
18	BLANK		■	■		
20	BLANK		■	■		
22	BLANK		■	■		
24	BLANK		■	■		
26	~~BLANK~~ **FOES-9100 / FOPP-9100**		■	■	**20/1**	**1**
	TOTAL PHASE KVA THIS SIDE					
	TOTAL KVA PER PHASE					
	TOTAL THREE PHASE KVA					

NOTES:
1. EXISTING PANELBOARD IS BY GE. NEW CIRCUIT BREAKER SHALL BE COMPATIBLE.

NOTES CONT.:
2.

EXISTING PANELBOARD: LIGHTING CABINET H — **LOCATION:** MICROSTRAINER BUILDING

12 **NEMA RATING** — 18 **POLES**

100 **AMP BUS RATING** — 60 **AMP MAIN BREAKER** — 22 **KA SHORT CIRCUIT RATING**

208Y /120 **VOLTS** — 3 **PHASE** 4 **WIRE** — **ELECTRONIC GRADE:** NO

CIRCUIT NO.	DESCRIPTION	LOAD KVA PHASE A	LOAD KVA PHASE B	LOAD KVA PHASE C	BREAKER AMPS/ POLES	NOTES
1	EXISTING LOAD		■	■	15/1	
3	EXISTING LOAD	■			15/1	
5	EXISTING LOAD		■	■	15/1	
7	EXISTING LOAD		■	■	15/1	
9	EXISTING LOAD	■			15/1	
11	EXISTING LOAD		■	■	15/1	
13	SPARE		■	■	15/1	
15	SPARE	■			15/1	
17	SPARE		■	■	15/1	
	TOTAL PHASE KVA THIS SIDE					

CIRCUIT NO.	DESCRIPTION	LOAD KVA PHASE A	LOAD KVA PHASE B	LOAD KVA PHASE C	BREAKER AMPS/ POLES	NOTES
2	EXISTING LOAD		■	■	15/1	
4	EXISTING LOAD	■			15/1	
6	EXISTING LOAD		■	■	15/1	
8	EXISTING LOAD		■	■	15/1	
10	EXISTING LOAD	■			15/1	
12	EXISTING LOAD		■	■	15/1	
14	EXISTING LOAD		■	■	15/1	
16	~~4305AM~~ **248.AD02.01 MOTORIZED VALVE**	■			**15/1**	
18	SPARE			■	15/1	
	TOTAL PHASE KVA THIS SIDE					
	TOTAL KVA PER PHASE					
	TOTAL THREE PHASE KVA					

EXISTING PANELBOARD: LP-F — **LOCATION:** CHLORINE BUILDING

4X **NEMA RATING** — 30 **POLES**

125 **AMP BUS RATING** — 100 **AMP MAIN BREAKER** — 22 **KA SHORT CIRCUIT RATING**

208Y /120 **VOLTS** — 3 **PHASE** 4 **WIRE** — **ELECTRONIC GRADE:** NO

CIRCUIT NO.	DESCRIPTION	LOAD KVA PHASE A	LOAD KVA PHASE B	LOAD KVA PHASE C	BREAKER AMPS/ POLES	NOTES
1	EXISTING LOAD		■	■	15/1	
3	EXISTING LOAD	■			15/1	
5	EXISTING LOAD		■	■	15/1	
7	EXISTING LOAD		■	■	15/1	
9	EXISTING LOAD	■			15/1	
11	EXISTING LOAD		■	■	15/1	
13	EXISTING LOAD		■	■	15/1	
15	EXISTING LOAD	■			15/1	
17	EXISTING LOAD		■	■	15/1	
19	EXISTING LOAD		■	■	15/1	
21	EXISTING LOAD	■			15/1	
23	EXISTING LOAD		■	■	20/1	
25	SPARE		■	■	30/3	
27		■	■			
29				■		
	TOTAL PHASE KVA THIS SIDE					

CIRCUIT NO.	DESCRIPTION	LOAD KVA PHASE A	LOAD KVA PHASE B	LOAD KVA PHASE C	BREAKER AMPS/ POLES	NOTES
2	EXISTING LOAD	■	■		15/1	
4	EXISTING LOAD			■		
6	EXISTING LOAD	■	■		15/1	
8	EXISTING LOAD			■		
10	EXISTING LOAD	■	■		15/1	
12	EXISTING LOAD			■		
14	EXISTING LOAD	■	■		15/1	
16	EXISTING LOAD			■		
18	EXISTING LOAD	■	■		15/1	
20	EXISTING LOAD			■		
22	EXISTING LOAD	■	■		15/1	
24	EXISTING LOAD			■		
26	EXISTING LOAD		■	■	15/1	
28	EXISTING LOAD	■			20/1	
30	~~BLANK~~ **LCP-4200**	■	■		**30/1**	**1**
	TOTAL PHASE KVA THIS SIDE					
	TOTAL KVA PER PHASE					
	TOTAL THREE PHASE KVA					

NOTES:
1. EXISTING PANELBOARD IS BY EATON. NEW CIRCUIT BREAKER SHALL BE COMPATIBLE.

NOTES CONT.:
2.

PANELBOARD: 267.BQ01.04 MINI-POWER CENTER — **LOCATION:** METER BUILDING

3R **NEMA RATING** — 18 **POLES**

25 **AMP BUS RATING** — 20 **AMP MAIN BREAKER**

240 /120 **VOLTS** — 1 **PHASE** 3 **WIRE**

CIRCUIT NO.	DESCRIPTION	LOAD KVA LINE 1	LOAD KVA LINE 2	BREAKER AMPS/ POLES	NOTES
1	**4311A0/4311AM RECEPTACLE SAMPLE PUMP**	**1.6**	■	**25/1**	GFCI BREAKER
3	**4312A0/4312AM RECEPTACLE SAMPLE PUMP**	■	**1.6**	**25/1**	GFCI BREAKER
5	**WEATHER CONTROLLED ENCLOSURE**	**1.5**	■	**20/1**	
7	**SPARE**	■		**20/1**	
9	**BLANK**		■		
11	**BLANK**	■			
13	**BLANK**		■		
15	**BLANK**	■			
17	**BLANK**		■		
	TOTAL PHASE KVA THIS SIDE	**3.1**	**1.6**		

CIRCUIT NO.	DESCRIPTION	LOAD KVA LINE 1	LOAD KVA LINE 2	BREAKER AMPS/ POLES	NOTES
2	**SPARE**	■		**20/1**	
4	**SPARE**		■	**20/1**	
6	**SPARE**	■		**20/1**	
8	**SPARE**		■	**20/1**	
10	**BLANK**	■			
12	**BLANK**		■		
14	**BLANK**	■			
16	**BLANK**		■		
18	**BLANK**	■			
	TOTAL PHASE KVA THIS SIDE	**0**	**0**		
	TOTAL KVA PER PHASE	**3.1**	**1.6**		
	TOTAL THREE PHASE KVA	**4.7**			

NOTE:

1. SEE GE-001 & GE-002 FOR ELECTRICAL NOTES, SYMBOLS & ABBREVIATIONS.

BID SET

SUBMITTAL DATE: 10/2026

GRAPHIC SCALES CHECK BEFORE USE

IF SHEET IS LESS THAN 22" X 34" IT IS A REDUCED PRINT. SCALE ACCORDINGLY

NO.	DATE	REVISIONS/DESCRIPTION	APPR'D.

DESIGNED BY: DP
CHECKED BY: DF
DESIGN LEAD: DAVID FREDERICKS, PE
PROJECT MANAGER: FRANK VISINGARDI JR., PE
DRAWN BY: KC

Savin Engineers, P.C.

STATE OF NEW YORK — DAVID G. FREDERICKS — 086076 — LICENSED PROFESSIONAL ENGINEER

Environmental Protection

ACCOUNTABLE MANAGER: STELLA UWAECHIE
PORTFOLIO MANAGER: ANDREW NG, P.E.
EXECUTIVE DIRECTOR: KENNETH E. MORIARTY, P.E.

"WARNING-IT IS A VIOLATION, OF THE NEW YORK STATE EDUCATION LAW, SECTION, 7209.2, FOR ANY PERSON, UNLESS (S)HE IS ACTING UNDER THE DIRECTION OF A LICENSED PROFESSIONAL ENGINEER, TO ALTER THIS DOCUMENT IN ANY WAY. IF ALTERED, THE ALTERING PERSON SHALL COMPLY WITH THE REQUIREMENTS OF NEW YORK EDUCATION, LAW, SECTION, 7209.2."

NEW YORK CITY ENVIRONMENTAL PROTECTION
BUREAU OF ENGINEERING DESIGN & CONSTRUCTION
96-05 HORACE HARDING EXPRESSWAY 5th FLOOR
CORONA, NEW YORK 11368
www.nyc.gov/dep

CAPITAL PROJECT WP-282
STATEN ISLAND, NY, OAKWOOD BEACH WRRF
CONTRACT OB-144A

PANELBOARD SCHEDULES

DATE: OCTOBER 2026
SHEET NO: 51 OF 74
DRAWING NO. E-011.00

Last Saved By & Date: Kchen, Wednesday, September 30, 2026 and Date Plotted: Wednesday, September 30, 2026 Time: 9:02 AM
Paper Size: ANSI A (8.50 x 11.00 Inches) Plot Scale: 0.386863 Plot Style Table: (N)_BEDC_BW.ctb
Drawing Name: & Location: C:\SAVIN\OB-144A\BID\E-011.00.dwg

All inquiries regarding this drawing(s) or project should be made to NYC Environmental Protection, Bureau of Engineering Design and Construction.

CONDUIT AND WIRE SCHEDULE

CONDUIT TAG	CONDUIT SIZE	WIRES	FROM	TO	REMARKS
MICROSTRAINER BUILDING					
P1000	3/4"	3#12, 1#12G	MCC NO 11 MOTOR CONTROL CENTER	144.AD01.01 DISCONNECT SWITCH	POWER
			144.AD01.01 DISCONNECT SWITCH	248.AD01.01 SLIDE GATE	
P1010	3/4"	3#12, 1#12G	MCC NO 11 MOTOR CONTROL CENTER	144.AD01.02 DISCONNECT SWITCH	POWER
			144.AD01.02 DISCONNECT SWITCH	248.AD01.02 SLIDE GATE	
P1020	3/4"	3#12, 1#12G	MCC NO 11 MOTOR CONTROL CENTER	144.AD01.03 DISCONNECT SWITCH	POWER
			144.AD01.03 DISCONNECT SWITCH	248.AD01.03 SLIDE GATE	
P1030	3/4"	3#12, 1#12G	MCC NO 11 MOTOR CONTROL CENTER	144.AD01.04 DISCONNECT SWITCH	POWER
			144.AD01.04 DISCONNECT SWITCH	248.AD01.04 SLIDE GATE	
P1040	3/4"	3#12, 1#12G	MCC NO 11 MOTOR CONTROL CENTER	144.AD01.05 DISCONNECT SWITCH	POWER
			144.AD01.05 DISCONNECT SWITCH	248.AD01.01 SLIDE GATE & MOTORIZED OPERATOR	
P1050	3/4"	2#10, 1#10G	LIGHTING CABINET H 208Y/120V	144.AD01.06 DISCONNECT SWITCH	POWER
			144.AD01.06 DISCONNECT SWITCH	248.AD02.01 SLIDE GATE & MOTORIZED VALVE	
METER BUILDING					
P2000	3/4"	2#10, 1#10G	PP-12 480V PANELBOARD	267.BQ01.04 208Y/120V MIN-POWER CENTER	POWER
P2010	1"	2#6, 1#6G	267.BQ01.04 208Y/120V MIN-POWER CENTER	LIGHTS & RECEPTACLES WEATHER CONTROLLED ENCLOSURE	POWER
P2020	1"	2#6, 1#6G	267.BQ01.04 208Y/120V MIN-POWER CENTER	RECEPTACLE - 4311A0/4311AM SAMPLE PUMP	POWER
P2030	1"	2#6, 1#6G	267.BQ01.04 208Y/120V MIN-POWER CENTER	RECEPTACLE - 4312A0/4312AM SAMPLE PUMP	POWER
P2100	3/4"	3#10, 1#10G	PP-12 480V PANELBOARD	144.AD01.07 DISCONNECT SWITCH	POWER
			144.AD01.07 DISCONNECT SWITCH	FCP-094.AD01.01 INDUCTION MIXER CONTROL PANEL	
			FCP-094.AD01.01 INDUCTION MIXER CONTROL PANEL	037.AD01.01 INDUCTION MIXER	
C2100	1"	8#12, 2#12 SPARE	EMERGENCY TANKS RETURN PUMP CONTROL PANEL 1591CC METER BUILDING	094.AD01.01 INDUCTION MIXER CONTROL PANEL	CONTROL
P2110	3/4"	3#12, 1#12G	MCC NO 12 MOTOR CONTROL CENTER	144.BQ01.01 DISCONNECT SWITCH	POWER
			144.BQ01.01 DISCONNECT SWITCH	037.BQ01.01 EMERGENCY TANKS RETURN PUMP	
C2110A	1"	12#12	STARTER 037.BQ01.01 MCC NO 12	EMERGENCY TANKS RETURN PUMP CONTROL PANEL 1591CC METER BUILDING	CONTROL
C2110B	3/4"	2#12	E-STOP 037.BQ01.01 EMERGENCY TANKS RETURN PUMP	EMERGENCY TANKS RETURN PUMP CONTROL PANEL 1591CC METER BUILDING	CONTROL
P2120	3/4"	3#12, 1#12G	MCC NO 12 MOTOR CONTROL CENTER	144.BQ01.02 DISCONNECT SWITCH	POWER
			144.BQ01.02 DISCONNECT SWITCH	037.BQ01.02 EMERGENCY TANKS RETURN PUMP	
C2120A	1"	12#12	STARTER 037.BQ01.02 MCC NO 12	EMERGENCY TANKS RETURN PUMP CONTROL PANEL 1591CC METER BUILDING	CONTROL
C2120B	3/4"	2#12	E-STOP 037.BQ01.02 EMERGENCY TANKS RETURN PUMP	EMERGENCY TANKS RETURN PUMP CONTROL PANEL 1591CC METER BUILDING	CONTROL
P2130	3/4"	3#12, 1#12G	PP-12 480V PANELBOARD	094.BQ01.01 SUMP PUMP COMBINATION STARTER	POWER
			094.BQ01.01 SUMP PUMP COMBINATION STARTER	4205C0/4205CM SUMP PUMP	

CONDUIT AND WIRE SCHEDULE

CONDUIT TAG	CONDUIT SIZE	WIRES	FROM	TO	REMARKS
CHLORINE BUILDING					
P3000	3/4"	2#10, 1#10G	LP-F 208Y/120V PANELBOARD	LCP-4200 CONTROL PANEL	POWER
E3010	1"	CAT-6	LCP-4200 CONTROL PANEL	4201AC SUPPLY PUMP CONTROL PANEL	NETWORK
F3010	3"	1 - 24-STRAND FIBER	LCP-4200 CONTROL PANEL	FOPP-9100 FIBER OPTIC PATCH PANEL (MAIN BLDG CONTROL ROOM - COMM. ENCLOSURE CE-9100)	FIBER, PARTIALLY ROUTED VIA DUCTBANK, PB-F4200, HH-1
F3010A	3"	-	LCP-4200 CONTROL PANEL	FOPP-9100 FIBER OPTIC PATCH PANEL (MAIN BLDG CONTROL ROOM)	FIBER - SPARE, PARTIALLY ROUTED VIA DUCTBANK, PB-F4200, HH-1. CAPPED IN CONTROL ROOM
P3010	3"	26#12, 11#12G	LCP-4200 CONTROL PANEL	PB-P4200A PULL BOX	UPS POWER / CONTROL - CCT INSTRUMENTS, PARTIALLY ROUTED VIA DUCTBANK, HH-1
P3010A	3"	-	LCP-4200 CONTROL PANEL	PB-P4200A PULL BOX	POWER / CONTROL - SPARE, PARTIALLY ROUTED VIA DUCTBANK, HH-1
P3015	1 1/2"	16#12, 6#12G	PB-P4200A PULL BOX	JB-P4300 JUNCTION BOX	UPS POWER / CONTROL
P3020B	3/4"	2#12, 1#12G	JB-P4300 JUNCTION BOX	FIT/LIT-4302CZ FLOW/LEVEL TRANSMITTER	UPS POWER / CONTROL
P3020C	3/4"	2#12, 1#12G		AIT-4311BZ ANALYZER	
P3020D	3/4"	2#12, 1#12G		AIT-4312BZ ANALYZER	
P3020G	3/4"	2#12, 1#12G		AIT-4302DZ ANALYZER	
P3020J	3/4"	2#12, 1#12G		AIT-4311CZ ANALYZER	
P3020L	3/4"	2#12, 1#12G		AIT-4313CZ ANALYZER	
C2020A	3/4"	2#12		FSH-4311BZ FLOW SWITCH	
C2020B	3/4"	2#12		FSH-4312BZ FLOW SWITCH	
P3020A	3/4"	2#12, 1#12G	PB-P4200A PULL BOX	FIT/LIT-4301CZ FLOW/LEVEL TRANSMITTER	UPS POWER
P3020E	3/4"	2#12, 1#12G		AIT-4301DZ ANALYZER	
P3020F	3/4"	2#12, 1#12G		AIT-4301EZ ANALYZER	
P3020H	3/4"	2#12, 1#12G		AIT-4302EZ ANALYZER	
P3020K	3/4"	2#12, 1#12G		AIT-4312CZ ANALYZER	
S3030	3"	13-2/C#16 TSP	LCP-4200 CONTROL PANEL	PB-S4200A PULL BOX	SIGNAL - CCT INSTRUMENTS, PARTIALLY ROUTED VIA DUCTBANK, HH-1
S3030A	3"	-			SIGNAL - SPARE, PARTIALLY ROUTED VIA DUCTBANK, HH-1
F3030	3"	1 - 12-STRAND FIBER			FIBER, PARTIALLY ROUTED VIA DUCTBANK, HH-1
S3035	1 1/2"	7-2/C#16 TSP	PB-S4200A PULL BOX	JB-S4300 JUNCTION BOX	SIGNAL
S3040B	3/4"	2-2/C#16 TSP	JB-S4300 JUNCTION BOX	FIT/LIT-4302CZ FLOW/LEVEL TRANSMITTER	SIGNAL
S3040C	3/4"	1-2/C#16 TSP		AIT-4311BZ ANALYZER	
S3040D	3/4"	1-2/C#16 TSP		AIT-4312BZ ANALYZER	
S3040G	3/4"	1-2/C#16 TSP		AIT-4302DZ ANALYZER	
S3040J	3/4"	1-2/C#16 TSP		AIT-4311CZ ANALYZER	
S3040L	3/4"	1-2/C#16 TSP		AIT-4313CZ ANALYZER	

CONDUIT AND WIRE SCHEDULE

CONDUIT TAG	CONDUIT SIZE	WIRES	FROM	TO	REMARKS
S3040A	3/4"	2-2/C#16 TSP	PB-S4200A PULL BOX	FIT/LIT-4301CZ FLOW/LEVEL TRANSMITTER	SIGNAL
S3040E	3/4"	1-2/C#16 TSP		AIT-4301DZ ANALYZER	
S3040F	3/4"	1-2/C#16 TSP		AIT-4301EZ ANALYZER	
S3040H	3/4"	1-2/C#16 TSP		AIT-4302EZ ANALYZER	
S3040K	3/4"	1-2/C#16 TSP		AIT-4312CZ ANALYZER	
F3040	3/4"	1 - 12-STRAND FIBER	PB-S4200A PULL BOX	FOPP-4200B FIBER OPTIC PATCH PANEL (RETURN PUMP CONTROL PANEL 1591CC)	FIBER
C3100	2"	32#12	LCP-4200 CONTROL PANEL	JB-C4200B JUNCTION BOX	CONTROL
C3110A	1 1/2"	16#12	JB-C4200B JUNCTION BOX	LCP-4201 SODIUM HYPOCHLORITE CONTROL PANEL	CONTROL
C3110B	1 1/2"	16#12		LCP-4202 SODIUM HYPOCHLORITE CONTROL PANEL	CONTROL
S3120	2"	5-2/C#16 TSP	LCP-4200 CONTROL PANEL	JB-S4200B JUNCTION BOX	SIGNAL
S3130A	1"	2-2/C#16 TSP	JB-S4200B JUNCTION BOX	LCP-4201 SODIUM HYPOCHLORITE CONTROL PANEL	SIGNAL
S3130B	1"	2-2/C#16 TSP		LCP-4202 SODIUM HYPOCHLORITE CONTROL PANEL	SIGNAL
S3130C	1"	1-2/C#16 TSP		FIT-42010Z FLOW TRANSMITTER	SIGNAL
C3140	2"	20#12	LCP-4200 CONTROL PANEL	JB-C4200C JUNCTION BOX	CONTROL
C3150A	3/4"	6#12	JB-C4200C JUNCTION BOX	LCP-4207 RAS HYPOCHLORITE CONTROL PANEL	CONTROL
C3150B	3/4"	6#12		LCP-4208 RAS HYPOCHLORITE CONTROL PANEL	CONTROL
C3150C	3/4"	4#12		LCP-4209 RAS HYPOCHLORITE CONTROL PANEL	CONTROL
C3150D	3/4"	4#12		LCP-4210 RAS HYPOCHLORITE CONTROL PANEL	CONTROL
S3160	2"	4-2/C#16 TSP	LCP-4200 CONTROL PANEL	JB-S4200C JUNCTION BOX	SIGNAL
S3170A	1"	2-2/C#16 TSP	JB-S4200C JUNCTION BOX	LCP-4207 RAS HYPOCHLORITE CONTROL PANEL	SIGNAL
S3170B	1"	2-2/C#16 TSP		LCP-4208 RAS HYPOCHLORITE CONTROL PANEL	SIGNAL
MAIN BUILDING					
P4000	3/4"	2#12, 1#12G	IPP-1 208Y/120V PANELBOARD	FOPP-9100 FIBER OPTIC PATCH PANEL (ENCLOSURE CE-9100)	POWER
E4010	1"	CAT-6	FOPP-9100 FIBER OPTIC PATCH PANEL (ENCLOSURE CE-9100)	CONTROL ROOM CONTROL PANEL	NETWORK

NOTE:

1. SEE GE-001 & GE-002 FOR ELECTRICAL NOTES, SYMBOLS & ABBREVIATIONS.

BID SET

SUBMITTAL DATE: 10/2026

GRAPHIC SCALES CHECK BEFORE USE

IF SHEET IS LESS THAN 22" X 34" IT IS A REDUCED PRINT. SCALE ACCORDINGLY

NO.	DATE	REVISIONS/DESCRIPTION	APPR'D.

DESIGNED BY: DP
DRAWN BY: KC
CHECKED BY: DF
DESIGN LEAD: DAVID FREDERICKS, PE
PROJECT MANAGER: FRANK VISINGARDI JR., PE

Savin Engineers, P.C.

DAVID G. FREDERICKS 086075 LICENSED PROFESSIONAL ENGINEER STATE OF NEW YORK

NYC Environmental Protection

ACCOUNTABLE MANAGER: STELLA UWAECHIE
PORTFOLIO MANAGER: ANDREW NG, P.E.
EXECUTIVE DIRECTOR: KENNETH E. MORIARTY, P.E.

"WARNING-IT IS A VIOLATION, OF THE NEW YORK STATE EDUCATION LAW, SECTION, 7209.2, FOR ANY PERSON, UNLESS (S)HE IS ACTING UNDER THE DIRECTION OF A LICENSED PROFESSIONAL ENGINEER, TO ALTER THIS DOCUMENT IN ANY WAY. IF ALTERED, THE ALTERING PERSON SHALL COMPLY WITH THE REQUIREMENTS OF NEW YORK EDUCATION, LAW, SECTION, 7209.2."

NEW YORK CITY ENVIRONMENTAL PROTECTION
BUREAU OF ENGINEERING DESIGN & CONSTRUCTION
96-05 HORACE HARDING EXPRESSWAY 5th FLOOR
CORONA, NEW YORK 11368
www.nyc.gov/dep

CAPITAL PROJECT WP-282
STATEN ISLAND, NY, OAKWOOD BEACH WRRF
CONTRACT OB-144A

CONDUIT AND WIRE SCHEDULE

DATE: OCTOBER 2026
SHEET NO: 52 OF 74
DRAWING NO. E-012.00

Last Saved By & Date: Kchen, Wednesday, September 30, 2026 and Date Plotted: Wednesday, September 30, 2026 Time: 9:01 AM
Paper Size: ANSI A (8.50 x 11.00 Inches) Plot Scale: 0.386863 Plot Style Table: (N)_BEDC_BW.ctb
Drawing Name: & Location: C:\SAVIN\OB-144A\BID\E-012.00.dwg

All inquiries regarding this drawing(s) or project should be made to NYC Environmental Protection, Bureau of Engineering Design and Construction.

NOTES:

1. SEE GE-001 & GE-002 FOR ELECTRICAL NOTES, SYMBOLS AND ABBREVIATIONS.
2. SEE E-012 FOR CONDUIT AND WIRE SCHEDULE.

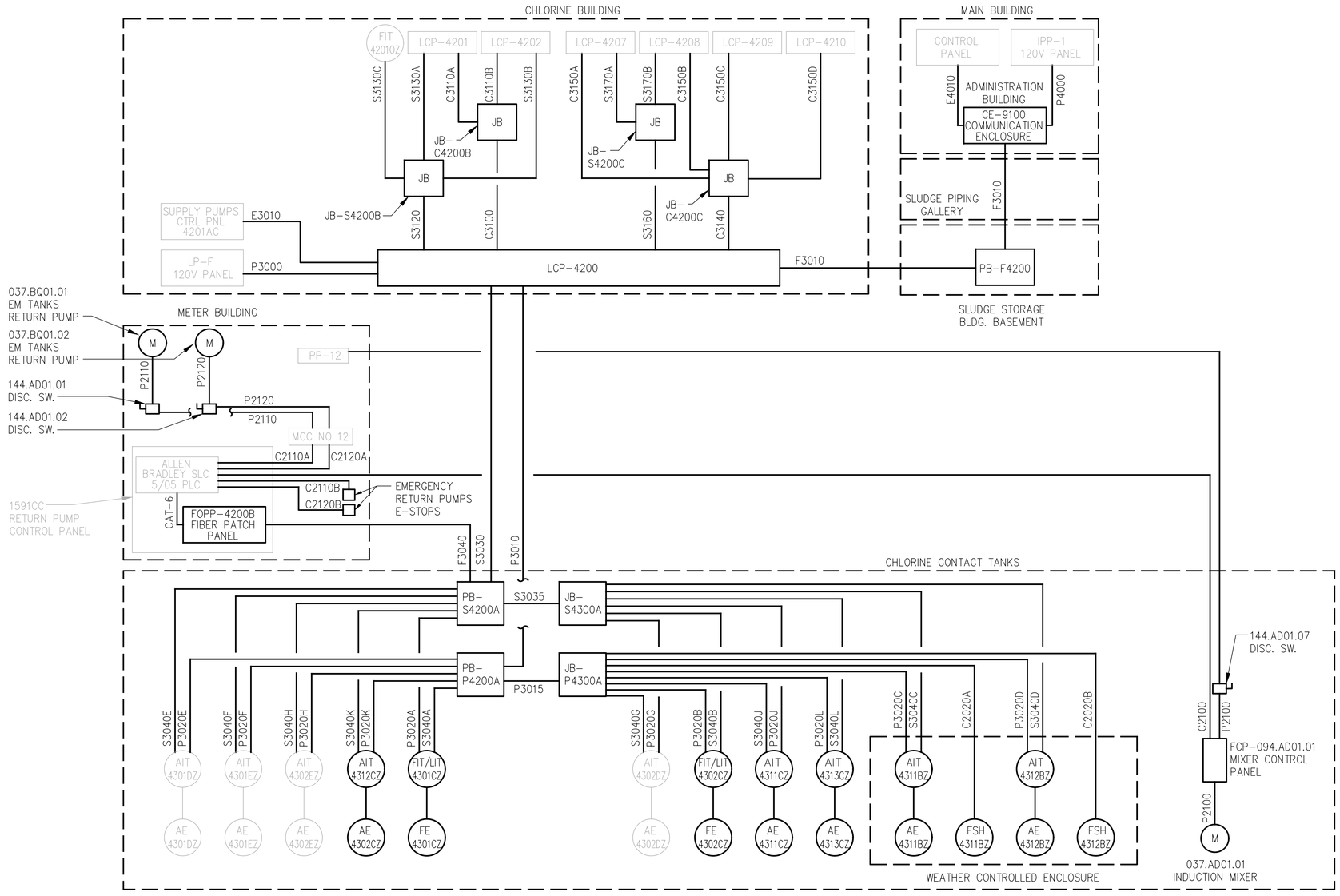

BID SET

SUBMITTAL DATE: 10/2026

GRAPHIC SCALES CHECK BEFORE USE

IF SHEET IS LESS THAN 22" X 34" IT IS A REDUCED PRINT. SCALE ACCORDINGLY

NO.	DATE	REVISIONS/DESCRIPTION	APPR'D.

DESIGNED BY: DP
DRAWN BY: KC
CHECKED BY: DF
DESIGN LEAD: DAVID FREDERICKS, PE
PROJECT MANAGER: FRANK VISINGARDI JR., PE

Savin Engineers, P.C.

STATE OF NEW YORK · DAVID G. FREDERICKS · 086076 · LICENSED PROFESSIONAL ENGINEER

Environmental Protection

ACCOUNTABLE MANAGER: STELLA UWAECHIE
PORTFOLIO MANAGER: ANDREW NG, P.E.
EXECUTIVE DIRECTOR: KENNETH E. MORIARTY, P.E.

"WARNING-IT IS A VIOLATION, OF THE NEW YORK STATE EDUCATION LAW, SECTION, 7209.2, FOR ANY PERSON, UNLESS (S)HE IS ACTING UNDER THE DIRECTION OF A LICENSED PROFESSIONAL ENGINEER, TO ALTER THIS DOCUMENT IN ANY WAY. IF ALTERED, THE ALTERING PERSON SHALL COMPLY WITH THE REQUIREMENTS OF NEW YORK EDUCATION, LAW, SECTION, 7209.2."

NEW YORK CITY ENVIRONMENTAL PROTECTION
BUREAU OF ENGINEERING DESIGN & CONSTRUCTION
96-05 HORACE HARDING EXPRESSWAY 5th FLOOR
CORONA, NEW YORK 11368
www.nyc.gov/dep

CAPITAL PROJECT WP-282
STATEN ISLAND, NY, OAKWOOD BEACH WRRF
CONTRACT OB-144A

CONTROL BLOCK DIAGRAM

DATE: OCTOBER 2026
SHEET NO: 53 OF 74
DRAWING NO. E-013.00

Last Saved By: ZALBER Last Date Saved: 9/9/2026 11:30 AM Date & Time Plotted: 9/30/2026 9:26 AM
Paper Size Printed/Plotted: ANSI full bleed D (34.00 x 22.00 Inches) Plot Scale: 1:1 Plot Style Table: DEP_BEDC_22x34_ByWeight.ctb
Drawing File Name & Drive Location: C:\SAVIN\OB-144A\BID\E-013.00.dwg

All inquiries regarding this drawing(s) or project should be made to NYC Environmental Protection, Bureau of Engineering Design and Construction.

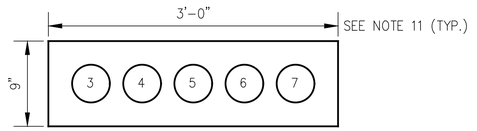

1 SECTION
E-001 SCALE: NTS

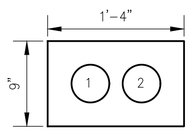

2 SECTION
E-001 SCALE: NTS

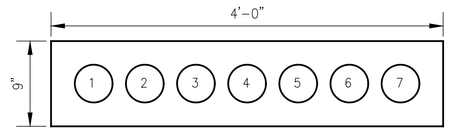

3 SECTION
E-001 SCALE: NTS

DUCT BANK CONDUIT SCHEDULE

CONDUIT DESIGNATION	SIZE	CONDUIT #	FROM	TO	NOTES
1	3"	F3010	PB-F4200	LCP-4200	FIBER
2	3"	F3010A	PB-F4200	LCP-4200	SPARE-FIBER
3	3"	P3010	PB-P4200A	LCP-4200	UPS POWER/CONTROL
4	3"	P3010A	PB-P4200A	LCP-4200	SPARE-UPS POWER
5	3"	S3030	PB-S4200A	LCP-4200	SIGNAL
6	3"	F3030	PB-S4200A	LCP-4200	FIBER
7	3"	S3030A	PB-S4200A	LCP-4200	SPARE-SIGNAL

NOTES:

1. SEE DRAWINGS GE-001 AND GE-002 FOR ELECTRICAL NOTES, SYMBOLS AND ABBREVIATIONS.
2. ALL CONDUIT, DUCT AND ELECTRICAL EQUIPMENT SHALL BE INSTALLED IN ACCORDANCE WITH THE LATEST ISSUE OF THE NYCEC, & ALL APPLICABLE.
3. CONDUIT AND DUCT SYSTEM ARE SHOWN DIAGRAMMATICALLY. EXACT LOCATION OF STUB-UPS SHALL BE DETERMINED BY CONTRACTOR UNLESS OTHERWISE DETAILED ON THE DRAWINGS.
4. ALL EMBEDDED CONDUIT RUNS SHALL BE ROUTED AS STRAIGHT AS PRACTICABLE AVOIDING MAJOR INTERFERENCES WITH PILES, PIPES ETC. CONTRACTOR SHALL DETERMINE THE DEPTH OF CROSSING CONDUITS AND PIPES MAKING THE TOP CONCRETE A MINIMUM OF 2'-6" BELOW GRADE ELEVATION.
5. ALL EMBEDDED CONDUIT RUNS BETWEEN EQUIPMENT SHALL BE HORIZONTALLY LEVEL. ALL CONDUIT RUNS TO MANHOLES OR UNDERGROUND VAULTS SHALL SLOPE A MINIMUM OF 3" PER 100-FEET FOR WATER DRAINAGE.
6. SPECIFIED COMPRESSIVE STRENGTH OF ALL CONCRETE AT 28 DAYS, 3000 PSI. CONCRETE FOR DUCT BANKS SHALL BE RED PIGMENTED CONTAINING AT LEAST 10LBS/CUBIC YARD OF RED-OXIDE.
7. ALL GROUND CABLES ON TOP OF DUCTBANKS SHALL BE 4/0 AWG STRANDED BARE COPPER WIRE SOFT DRAWN. ALL DUCTBANK GROUND WIRE SHALL BE CONNECTED TO THE PLANT GROUNDING GRID.
8. PULLING IRONS SHALL BE LOCATED IN FLOOR OPPOSITE DUCT LINE ENTRANCE. HOOK-ENDS OF PULLING IRONS SHALL BE PLACED BEHIND REINFORCING RODS. ADDITIONAL IRON SHALL BE LOCATED IN FLOOR OPPOSITE MANHOLE COVER.
9. FOR CONDUIT AND WIRE SCHEDULE, SEE E-012.
10. FOR DUCTBANK DETAILS, SEE E-015 AND E-016.
11. DUCTBANK DIMENSIONS ARE APPROXIMATE. THE CONTRACTOR SHALL SUBMIT PROPOSED DUCTBANK LAYOUTS WITH DIMENSIONS FOR REVIEW BY THE ENGINEER.

BID SET

SUBMITTAL DATE: 10/2026

GRAPHIC SCALES CHECK BEFORE USE

IF SHEET IS LESS THAN 22" X 34" IT IS A REDUCED PRINT. SCALE ACCORDINGLY

NO.	DATE	REVISIONS/DESCRIPTION	APPR'D.

DESIGNED BY: DP
DRAWN BY: KC
CHECKED BY: DF
DESIGN LEAD: DAVID FREDERICKS, PE
PROJECT MANAGER: FRANK VISINGARDI JR., PE

Savin Engineers, P.C.

STATE OF NEW YORK · DAVID G. FREDERICKS · 086076 · LICENSED PROFESSIONAL ENGINEER

Environmental Protection

ACCOUNTABLE MANAGER: STELLA UWAECHIE
PORTFOLIO MANAGER: ANDREW NG, P.E.
EXECUTIVE DIRECTOR: KENNETH E. MORIARTY, P.E.

"WARNING-IT IS A VIOLATION, OF THE NEW YORK STATE EDUCATION LAW, SECTION, 7209.2, FOR ANY PERSON, UNLESS (S)HE IS ACTING UNDER THE DIRECTION OF A LICENSED PROFESSIONAL ENGINEER, TO ALTER THIS DOCUMENT IN ANY WAY. IF ALTERED, THE ALTERING PERSON SHALL COMPLY WITH THE REQUIREMENTS OF NEW YORK EDUCATION, LAW, SECTION, 7209.2."

NEW YORK CITY ENVIRONMENTAL PROTECTION
BUREAU OF ENGINEERING DESIGN & CONSTRUCTION
96-05 HORACE HARDING EXPRESSWAY 5th FLOOR
CORONA, NEW YORK 11368
www.nyc.gov/dep

CAPITAL PROJECT WP-282
STATEN ISLAND, NY, OAKWOOD BEACH WRRF
CONTRACT OB-144A
DUCTBANK SECTIONS AND SCHEDULE

DATE: OCTOBER 2026
SHEET NO: 54 OF 74
DRAWING NO. E-014.00

Last Saved By: ZALBER Last Date Saved: 9/9/2026 11:31 AM Date & Time Plotted: 9/30/2026 9:26 AM
Paper Size Printed/Plotted: ANSI full bleed D (34.00 x 22.00 Inches) Plot Scale: 1:1 Plot Style Table: DEP_BEDC_22x34_ByWeight.ctb
Drawing File Name & Drive Location: C:\SAVIN\OB-144A\BID\E-014.00.dwg

All inquiries regarding this drawing(s) or project should be made to NYC Environmental Protection, Bureau of Engineering Design and Construction.

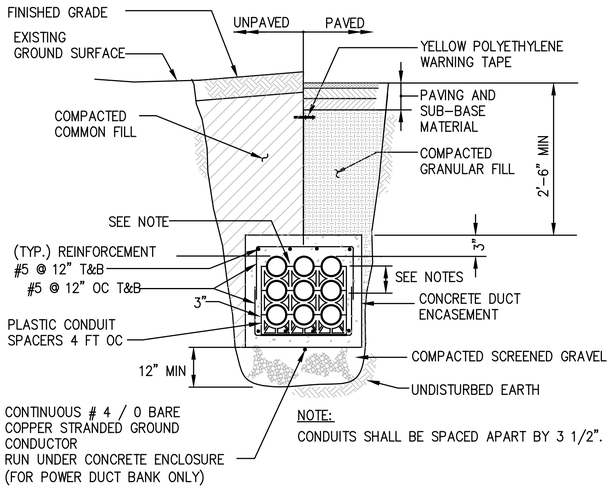

1 – TYPICAL UNDERGROUND POWER AND SIGNAL DUCT BANKS DETAIL
SCALE: NTS

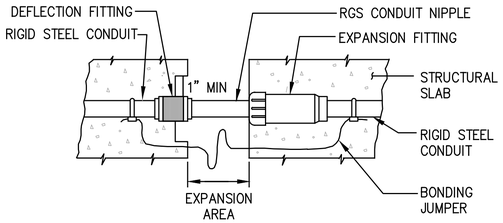

5 – COMBINATION EXPANSION–DEFLECTION FITTING DETAIL
SCALE: NTS

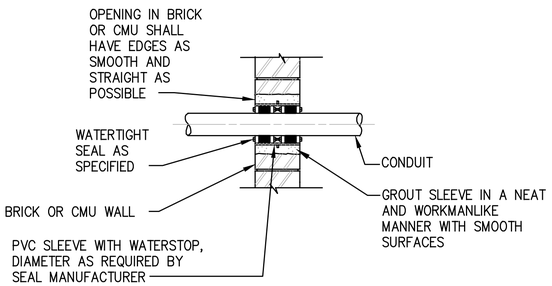

7 – WATERTIGHT CONDUIT PENETRATION THROUGH BLOCK WALL DETAIL
SCALE: NTS

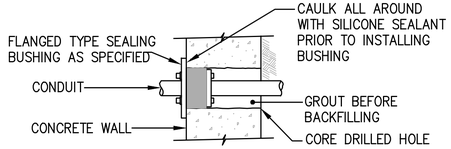

2 – BELOW GRADE CONDUIT PENETRATION THROUGH EXISTING CONCRETE WALL DETAIL
SCALE: NTS

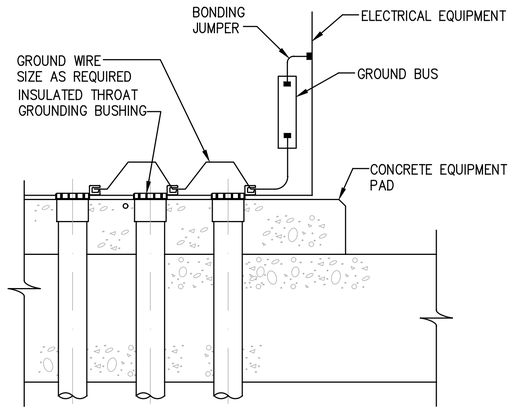

6 – MULTIPLE BONDING OF RACEWAYS DETAIL
SCALE: NTS

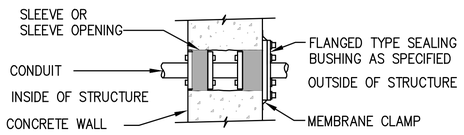

8 – ABOVE GRADE CONCRETE PENETRATION THROUGH EXISTING WALL DETAIL
SCALE: NTS

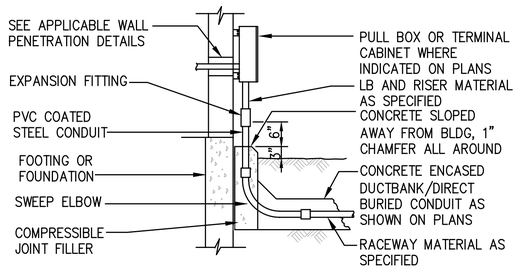

3 – ABOVE GRADE CONDUIT PENETRATION THROUGH EXISTING BUILDINGS OR STRUCTURES DETAIL
SCALE: NTS

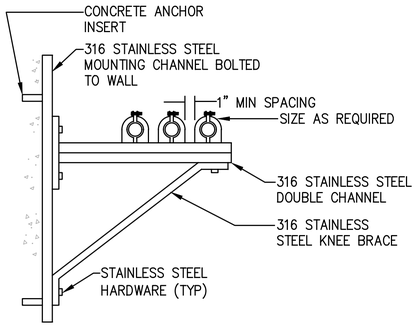

4 – WALL–MOUNTED CONDUIT RACK DETAIL
SCALE: NTS

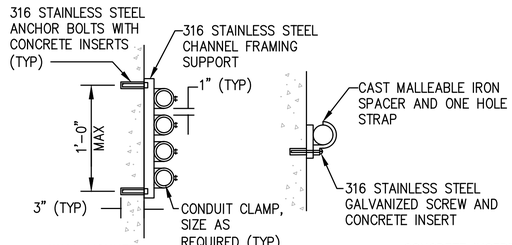

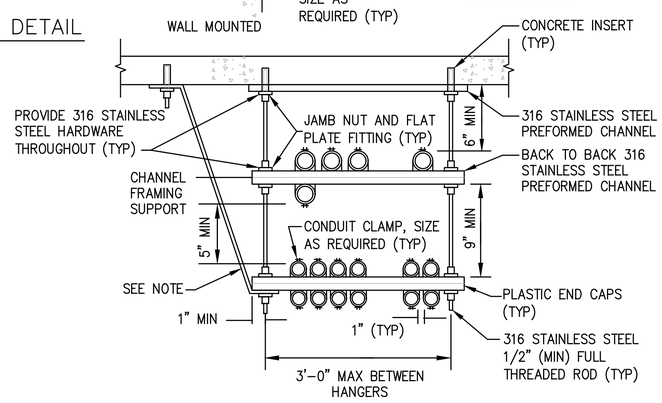

9 – TRAPEZE, WALL AND CEILING CONDUIT MOUNTING DETAIL
SCALE: NTS

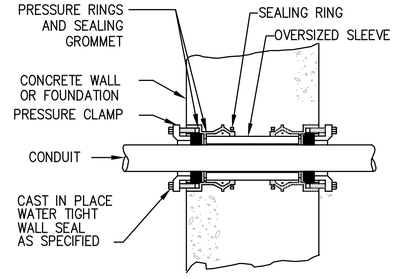

10 – WATERTIGHT CONDUIT PENETRATION (NEW WORK) DETAIL
SCALE: NTS

NOTE:
PROVIDE SEISMIC RESTRAINTS PER NYC CODE AND APPLICABLE SECTIONS OF DIVISION 26 SPECIFICATIONS. ALL DESIGNED RESTRAINT SYSTEMS SHALL BE SIGNED AND SEALED BY A LICENSED ENGINEER IN THE STATE OF NEW YORK.

BID SET
SUBMITTAL DATE: 10/2026

GRAPHIC SCALES CHECK BEFORE USE
IF SHEET IS LESS THAN 22" X 34" IT IS A REDUCED PRINT. SCALE ACCORDINGLY

NO.	DATE	REVISIONS/DESCRIPTION	APPR'D.

DESIGNED BY: DP
DRAWN BY: KC
CHECKED BY: DF
DESIGN LEAD: DAVID FREDERICKS, PE
PROJECT MANAGER: FRANK VISINGARDI JR., PE

Savin Engineers, P.C.

STATE OF NEW YORK · DAVID S. FREDERICKS · 086076 · LICENSED PROFESSIONAL ENGINEER

Environmental Protection

ACCOUNTABLE MANAGER: STELLA UWAECHIE
PORTFOLIO MANAGER: ANDREW NG, P.E.
EXECUTIVE DIRECTOR: KENNETH E. MORIARTY, P.E.

"WARNING-IT IS A VIOLATION, OF THE NEW YORK STATE EDUCATION LAW, SECTION, 7209.2, FOR ANY PERSON, UNLESS (S)HE IS ACTING UNDER THE DIRECTION OF A LICENSED PROFESSIONAL ENGINEER, TO ALTER THIS DOCUMENT IN ANY WAY. IF ALTERED, THE ALTERING PERSON SHALL COMPLY WITH THE REQUIREMENTS OF NEW YORK EDUCATION, LAW, SECTION, 7209.2."

NEW YORK CITY ENVIRONMENTAL PROTECTION
BUREAU OF ENGINEERING DESIGN & CONSTRUCTION
96-05 HORACE HARDING EXPRESSWAY 5th FLOOR
CORONA, NEW YORK 11368
www.nyc.gov/dep

CAPITAL PROJECT WP-282
STATEN ISLAND, NY, OAKWOOD BEACH WRRF
CONTRACT OB-144A
STANDARD DETAILS
SHEET 1 OF 2

DATE: OCTOBER 2026
SHEET NO: 55 OF 74
DRAWING NO. E–015.00

Last Saved By: ZALBER Last Date Saved: 9/9/2026 11:32 AM Date & Time Plotted: 9/30/2026 9:26 AM
Paper Size Printed/Plotted: ANSI full bleed D (34.00 x 22.00 Inches) Plot Style Table: DEP_BEDC_22x34_ByWeight.ctb
Drawing File Name & Drive Location: C:\SAVIN\OB-144A\BID\E-015.00.dwg Plot Scale:1:1
All inquiries regarding this drawing(s) or project should be made to NYC Environmental Protection, Bureau of Engineering Design and Construction.

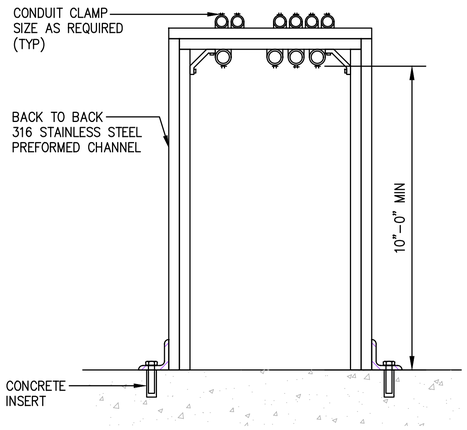

11 – TYPICAL FREE STANDING CONDUIT RACK DETAIL

SCALE: NTS

NOTES:

1. CONDUIT RACK STRUCTURE SHALL BE DESIGNED BY A STRUCTURAL ENGINEER LICENSED IN THE STATE OF NEW YORK AND SIGNED BY SAME. STRUCTURE SHALL BE SEISMICALLY BRACED TO MEET NYC BUILDING CONSTRUCTION CODE REQUIREMENTS.
2. NUMBER OF CONDUITS SHALL BE AS REQUIRED.
3. WIDTH OF STRUCTURE SHALL BE AS REQUIRED TO MOUNT ALL CONDUITS PER CONTRACT.
4. ALL CORNERS AND ROUGH/CUT EDGES SHALL BE GROUND SMOOTH OR CAPPED.

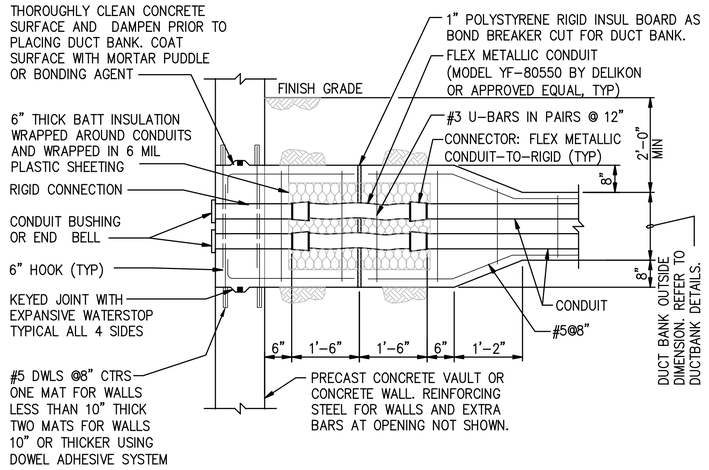

12 – TYPICAL UNDERGROUND DUCTBANK FLEXIBLE ENTRANCE DETAIL

SCALE: N.T.S.

NOTES:

1. REINFORCING SHALL BE PROVIDED FOR A DISTANCE OF 6 FEET FROM THE STRUCTURE WALL.

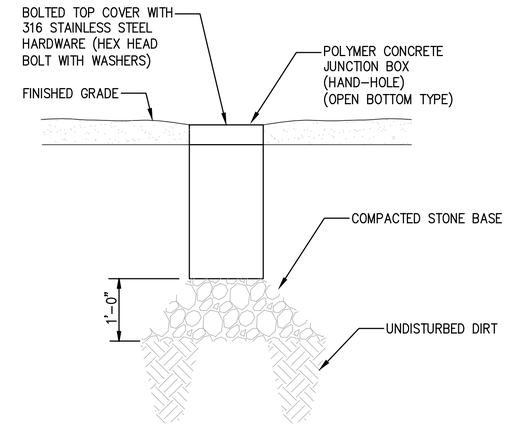

13 – INGROUND POLYMER CONCRETE JUNCTION BOX DETAIL

SCALE: N.T.S.
(SIZE JUNCTION BOX AS REQUIRED)

NOTES:

1. HANDHOLES SHALL BE UL LISTED BOX VERTICAL DESIGN/TEST LOAD OF 22,500/33,750 POUNDS. THIS INCLUDES BOX BODY, ASSOCIATED COVER SUPPORTING GROUND/STONE.
2. PROVIDE BUILT-IN SEGREGATION BARRIER FOR HH-1. SIGNAL AND FIBER CABLES SHALL BE KEPT SEPARATE FROM 120V POWER WIRES.
3. ANSI/SCTE 77 TIER 22 BOX WITH TIER 15 COVER (TYP.)

BID SET

SUBMITTAL DATE: 10/2026

GRAPHIC SCALES CHECK BEFORE USE

IF SHEET IS LESS THAN 22" X 34" IT IS A REDUCED PRINT. SCALE ACCORDINGLY

NO.	DATE	REVISIONS/DESCRIPTION	APPR'D.

DESIGNED BY: DP
DRAWN BY: KC
CHECKED BY: DF
DESIGN LEAD: DAVID FREDERICKS, PE
PROJECT MANAGER: FRANK VISINGARDI JR., PE

Savin Engineers, P.C.

STATE OF NEW YORK · DAVID G. FREDERICKS · 086076 · LICENSED PROFESSIONAL ENGINEER

NYC Environmental Protection

ACCOUNTABLE MANAGER: STELLA UWAECHIE
PORTFOLIO MANAGER: ANDREW NG, P.E.
EXECUTIVE DIRECTOR: KENNETH E. MORIARTY, P.E.

"WARNING-IT IS A VIOLATION, OF THE NEW YORK STATE EDUCATION LAW, SECTION, 7209.2, FOR ANY PERSON, UNLESS (S)HE IS ACTING UNDER THE DIRECTION OF A LICENSED PROFESSIONAL ENGINEER, TO ALTER THIS DOCUMENT IN ANY WAY. IF ALTERED, THE ALTERING PERSON SHALL COMPLY WITH THE REQUIREMENTS OF NEW YORK EDUCATION, LAW, SECTION, 7209.2."

NEW YORK CITY ENVIRONMENTAL PROTECTION
BUREAU OF ENGINEERING DESIGN & CONSTRUCTION
96-05 HORACE HARDING EXPRESSWAY 5th FLOOR
CORONA, NEW YORK 11368
www.nyc.gov/dep

CAPITAL PROJECT WP-282
STATEN ISLAND, NY, OAKWOOD BEACH WRRF
CONTRACT OB-144A
STANDARD DETAILS
SHEET 2 OF 2

DATE: OCTOBER 2026
SHEET NO: 56 OF 74
DRAWING NO. E-016.00

All inquiries regarding this drawing(s) or project should be made to NYC Environmental Protection, Bureau of Engineering Design and Construction.

Last Saved By:ZALBER Last Date Saved:9/9/2026 11:33 AM Date & Time Plotted: 9/30/2026 9:26 AM
Paper Size Printed/Plotted: ANSI full bleed D (34.00 x 22.00 Inches) Plot Scale:1:1 Plot Style Table: DEP_BEDC_22x34_ByWeight.ctb
Drawing File Name & Drive Location: C:\SAVIN\OB-144A\BID\E-016.00.dwg

SYMBOLOGY

- FLOW STREAM
- FIBER OPTIC LINK
- ELECTRICAL SIGNAL
- NETWORK COMMUNICATION SIGNALS
- INSTRUMENT SUPPLY OR CONNECTION TO PROCESS
- HEAT TRACE
- BUILDING OR ROOM
- CONNECTING LINES
- NON–CONNECTING LINES
- SIGNAL CONTINUATION ON P&ID DRAWINGS X = A, B, ETC.
- CONTAINMENT
- ELECTROMAGNETIC FLOWMETER
- ULTRASONIC
- FLOAT
- CENTRIFUGAL PUMP (DRY PIT)
- DILUTION WATER PUMP
- MOTOR
- INDUCTION MIXER
- Y–STRAINER
- STRAINER
- BALL VALVE
- CHECK VALVE
- BUTTERFLY VALVE
- ECCENTRIC REDUCER
- CONCENTRIC REDUCER
- RUPTURE DISC
- CAPACITANCE PROBE
- ACTUATOR
- DIAPHRAGM SEAL
- AIR RELEASE VALVE

INSTRUMENT IDENTIFICATION TABLE

ISA–S5.1–1984

	FIRST LETTER		SUCCEEDING LETTERS		
LETTER	MEASURED OR INITIATING VARIABLE	MODIFIER	READOUT OR PASSIVE FUNCTION	OUTPUT FUNCTION	MODIFIER
A	ANALYSIS (A)		ALARM		
B	BURNER, COMBUSTION		(1) (2)	CLOSE, STOP, DECRFASE (2)	(1) (2)
C	CONDUCTIVITY			CONTROL	
D	DENSITY	DIFFERENTIAL		OPEN, STOP, INCRFASE (2)	
E	VOLTAGE		SENSOR (PRIMARY ELEMENT)		
F	FLOW RATE	RATIO (FRACTION)			FAIL (1)
G	GAUGE		GLASS, VIEWING DEVICE	GATE	
H	HAND				HIGH (OPENED)
I	CURRENT ELECTRICAL		INDICATE		
J	POWER	SCAN			
K	TIME. TIME SCHEDULE			CONTROL STATION	
L	LEVEL		LIGHT		LOW
M	MOTOR. MOTION (2)	MOMENTARY		MOTOR (1)	MIDDLE OR INTERMEDIATE
N	(1) (2)		(1) (2)	(1) (2)	ON OR OPERATE (2)
O	(1) (2)		ORIFICE, RESTRICTION		OVERLOAD (2)
P	PRESSURE OR VACUUM		POINT (TEST) CONNECTION	PUMP	
Q	QUANTITY OR EVENT (2)	INTEGRATE, TOTALIZE	INTEGRATE		
R	RADIATION		RECORD		
S	SPEED OR FREQUENCY	SAFETY		SWITCH	
T	TEMPERATURE			TRANSMIT	
U	MULTIVARIABLE (2)		MULTIFUNCTION (2)	MULTIFUNCTION (2)	MULTIFUNCTION (2)
V	VIBRATION MECHANICAL ANALYSIS			VALVE, DAMPER, LOUVER	
W	WEIGHT OR FORCE		WELL		
X	UNCLASSIFIED (2)		UNCLASSIFIED (2)	UNCLASSIFIED (2)	UNCLASSIFIED (2)
Y	EVENT, STATE, PRESENCE (2)			RELAY OR COMPUTE, (2)	
Z	POSITION, DIMENSION			DRIVER, ACTUATOR, UNCLASSIFIED FINAL CONTROL ELEMENT	

(1) USER'S CHOICE
(2) WHEN USED, EXPLANATION IS SHOWN ADJACENT TO INSTRUMENT SYMBOL. SEE ABBREVIATIONS AND LETTER SYMBOLS.

SYMBOLOGY

LLL NNNL
- LLL = FUNCTIONAL INSTRUMENT IDENTIFICATION LETTERS FROM INSTRUMENT IDENTIFICATION TABLE
- L = LETTER SUFFIX TO DISTINGUISH BETWEEN INSTRUMENTS IN LOOP WITH SAME FUNCTIONAL IDENTIFICATION (USED AS REQUIRED)
- NNN = LOOP NUMBER

- QUICK DISCONNECT
- OPEN EQUIPMENT DRAIN
- FIELD MOUNTED
- SUMP PUMP
- PILOT LIGHT
- VENT
- FACE OF PANEL MOUNTED
- INTERLOCK LOGIC
- XX HS FIELD HAND SWITCH
- XX HS PANEL MOUNTED HAND SWITCH
- DIGITAL INPUT
- DIGITAL OUTPUT
- ANALOG INPUT
- ANALOG OUTPUT
- XXX "XXX" = VALVE ITEM NUMBER. REFER TO VALVE SCHEDULE ON GM–001

ABBREVIATIONS

AI	ANALOG INPUT
AO	ANALOG OUPUT
CCT	CHLORINE CONTACT TANK
CE	COMMUNICATION ENCLOSURE
COM	COMMON
CP	CONTROL PANEL
CPU	CENTRAL PROCESSING UNIT
CR	CONTROL RELAY
CS	CONSTANT SPEED
DI	DIGITAL INPUT
DCU	DISTRIBUTED CONTROL UNIT
DO	DIGITAL OUTPUT
ENET	ETHERNET
ESTOP	EMERGENCY STOP
FACP	FIRE ALARM CONTROL PANEL
FCP	FACTORY CONTROL PANEL
FOES	FIBER OPTIC ETHERNET SWITCH
FOPP	FIBER OPTIC PATCH PANEL
FOT	FIBER OPTIC TRANSDUCER
FP	FIELD PANEL
FRP	FIBERGLASS REINFORCED POLYESTER
FSCP	FILL STATION CONTROL PANEL
FVNR	FULL VOLTAGE NON–REVERSING
GND	GROUND
HLCP	HVAC LOCAL CONTROL PANEL
HOA	HAND/OFF/AUTO
HOR	HAND/OFF/REMOTE
HVAC	HEATING, VENTILATION AND AIR CONDITIONING
I/O	INPUT/OUTPUT
LCP	LOCAL CONTROL PANEL
LCS	LOCAL CONTROL STATION
LD	LEAK DETECTION
LIO	LOCAL INPUT/OUTPUT
LOR	LOCAL/OFF/REMOTE
MCC	MOTOR CONTROL CENTER
NAOCL	SODIUM HYPOCHLORITE
NIC	NOT IN CONTRACT
OIT	OPERATOR INTERFACE TERMINAL
O/O	ON/OFF
OSC	ON/STOP/CLOSE
P	PUMP
PC	PUMP CONTROLLER
PLC	PROGRAMMABLE LOGIC CONTROLLER
PS	POWER SUPPLY
RIO	REMOTE INPUT/OUTPUT
RTD	RESISTANCE TEMPERATURE DETECTOR
SS	STAINLESS STEEL
TB	TERMINAL BLOCK
TC	THERMOCOUPLE
TRC	TOTAL RESIDUAL CHLORINE
TSS	TURBIDITY, SUSPENDED SOLIDS
UPS	UNINTERRUPTIBLE POWER SUPPLY
V	VOLTAGE
VDC	VOLTAGE – DIRECT CURRENT
VS	VARIABLE SPEED

GENERAL NOTES

1. SEE ELECTRICAL DRAWINGS FOR MOTOR CONTROL AND VARIABLE SPEED DRIVE LOCATIONS WITHIN THE MCC.
2. COMPONENTS AND PANELS SHOWN WITH A (◆) ARE TO BE PROVIDED AND INSTALLED AS PART OF SPECIFICATION DIVISION 16.
3. COMPONENTS AND PANELS WITH A SINGLE ASTERISK (*) ARE TO BE PROVIDED AS PART OF SPECIFICATION DIVISION 13, INSTALLED BY THE CONTRACTOR.
4. COMPONENTS AND PANELS SHOWN WITH A DOUBLE ASTERISK (**) ARE TO BE PROVIDED AS PART OF A PACKAGED SYSTEM, INSTALLED BY CONTRACTOR.

CONTROL PANEL SYMBOLOGY

- ELECTRICAL RECEPTACLE
- NORMALLY OPENED CONTACT
- NORMALLY CLOSED CONTACT
- CONTROL RELAY
- NORMALLY OPENED PUSHBUTTON
- NORMALLY CLOSED PUSHBUTTON

* = PILOT LIGHT COLOR
A = AMBER
G = GREEN
R = RED

- PILOT LIGHT
- ALARM HORN
- SELECTOR SWITCH
- TB TERMINAL BLOCK
- FUSED TERMINAL BLOCK
- GROUND
- FIELD EQUIPMENT OR DEVICE
- PANEL WIRE
- FIELD WIRE
- CIRCUIT BREAKER
- TEMPERATURE SWITCH
- SHIELDED TWISTED PAIR WIRE
- HEATER

BID SET

SUBMITTAL DATE: 10/2026

GRAPHIC SCALES CHECK BEFORE USE

IF SHEET IS LESS THAN 22" X 34" IT IS A REDUCED PRINT. SCALE ACCORDINGLY

NO.	DATE	REVISIONS/DESCRIPTION	APPR'D.

DESIGNED BY: LH
DRAWN BY: MM
CHECKED BY: CW
DESIGN LEAD: CURT WENDT, PE
PROJECT MANAGER: FRANK VISINGARDI,JR., PE

STATE OF NEW YORK · CURT W. WENDT · LICENSED PROFESSIONAL ENGINEER · 106710

Environmental Protection

ACCOUNTABLE MANAGER: STELLA UWAECHIE
PORTFOLIO MANAGER: ANDREW NG, P.E.
EXECUTIVE DIRECTOR: KENNETH E. MORIARTY, P.E.

"WARNING-IT IS A VIOLATION, OF THE NEW YORK STATE EDUCATION LAW, SECTION, 7209.2, FOR ANY PERSON, UNLESS (S)HE IS ACTING UNDER THE DIRECTION OF A LICENSED PROFESSIONAL ENGINEER, TO ALTER THIS DOCUMENT IN ANY WAY. IF ALTERED, THE ALTERING PERSON SHALL COMPLY WITH THE REQUIREMENTS OF NEW YORK EDUCATION, LAW, SECTION, 7209.2."

NEW YORK CITY ENVIRONMENTAL PROTECTION
BUREAU OF ENGINEERING DESIGN & CONSTRUCTION
96-05 HORACE HARDING EXPRESSWAY 5th FLOOR
CORONA, NEW YORK 11368
www.nyc.gov/dep

CAPITAL PROJECT WP-282
STATEN ISLAND, NY, OAKWOOD BEACH WRRF
CONTRACT OB-144A

SYMBOLS, ABBREVIATIONS AND GENERAL NOTES

DATE: OCTOBER 2026
SHEET NO: 57 OF 74
DRAWING NO. GI–001.00

Last Saved By: ZALBER Last Date Saved: 7/8/2026 9:39 AM Date & Time Plotted: 9/9/2026 11:34 AM
Paper Size Printed/Plotted: ANSI full bleed D (34.00 x 22.00 Inches) Plot Scale: 1:1 Plot Style Table: DEP_BEDC_22x34_ByWeight.ctb
Drawing File Name & Drive Location: C:\pwworking\east01\d4119068\GI-001.00.dwg

All inquiries regarding this drawing(s) or project should be made to NYC Environmental Protection, Bureau of Engineering Design and Construction.

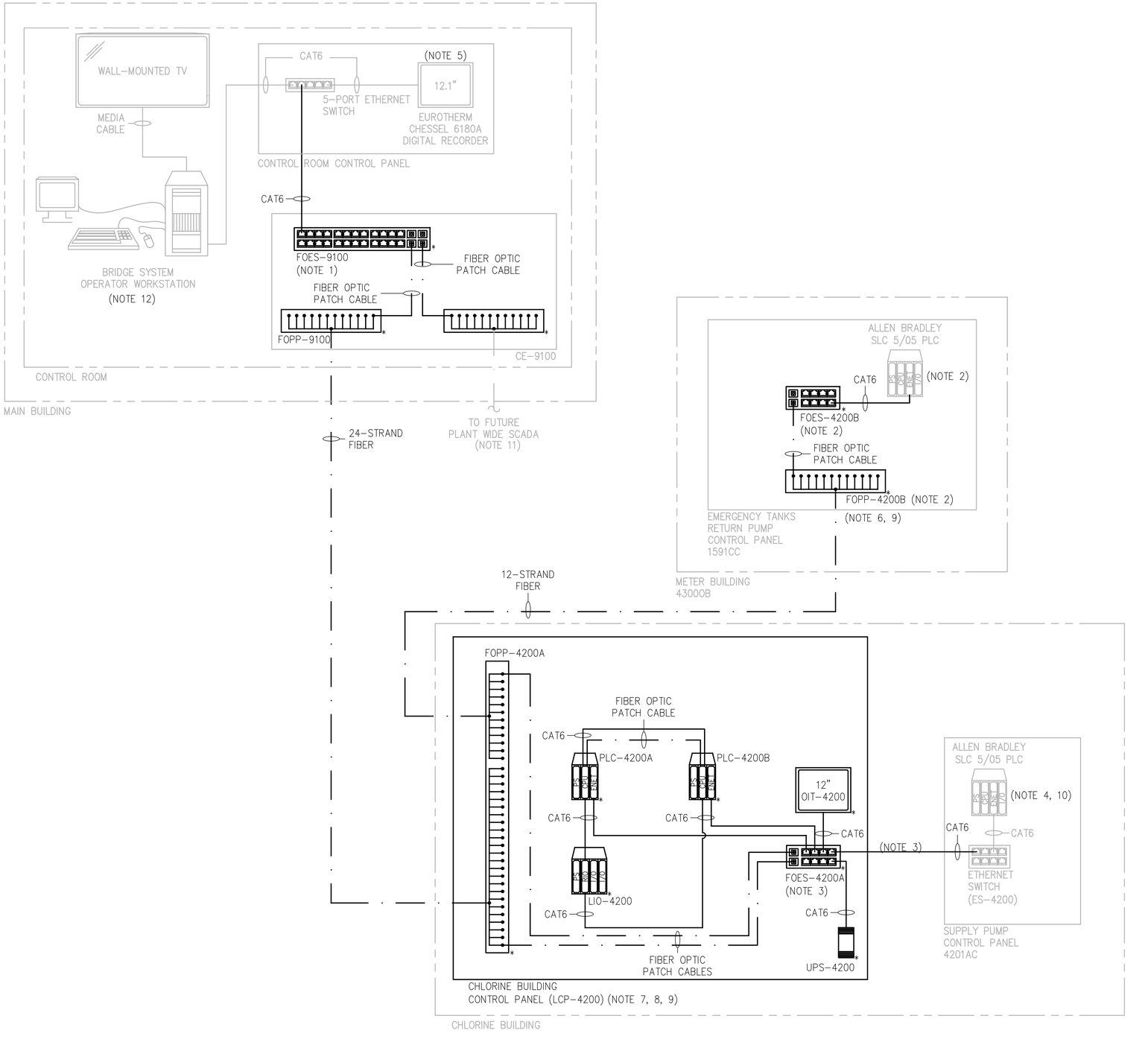

NOTES

1. FOES-9100 SHALL BE POWERED FROM EXISTING UPS IN RACK.
2. INSTALL FOES-4200B AND FOPP-4200B WITHIN EXISTING EMERGENCY TANKS RETURN PUMP CONTROL PANEL 1591CC. REPLACE THE EXISTING ETHERNET SWITCH IN THE ENCLOSURE WITH THE NEW FOES-4200B.
3. CONNECT THE NEW FOES-4200A (INSIDE LCP-4200) TO THE EXISTING ETHERNET SWITCH IN THE EXISTING SUPPLY PUMP CONTROL PANEL 4201AC VIA CAT6 CABLE. EXISTING SUPPLY PUMP CONTROL PANEL 4201AC IS LOCATED IN CHLORINE BLDG. REFER TO CONTRACT DRAWING E-009 FOR CONTROL PANEL LOCATION.
4. UPGRADE THE FIRMWARE OF THE EXISTING ALLEN BRADLEY SLC-5/05 PROCESSORS TO BE THE LATEST AVAILABLE FIRMWARE. UPGRADE AB L551 VERSION A OR B, PROCESSOR TO VERSION FRN11. UPGRADE AB L551 VERSION C OR D, PROCESSOR TO VERSION FIRMWARE FRN 13. COORDINATE WITH THE OWNER AS NEEDED.
5. UPGRADE THE FIRMWARE OF THE EXISTING CHESSEL 6180A RECORDER TO VERSION MTC128 OR LATEST VERSION TO ALLOW FOR A MINIMUM OF 128 SIGNALS TO BE TIED INTO THE EXISTING BRIDGE SYSTEM. COORDINATE WITH THE OWNER AS NEEDED.
6. EXISTING EMERGENCY TANKS RETURN PUMP CONTROL PANEL 1591CC IS LOCATED IN THE METER BUILDING. REFER TO E-007 FOR FURTHER INFORMATION.
7. LCP-4200 INCLUDES (ONE PRIMARY PLC-4200A AND BACKUP PLC-4200B) AND ONE I/O RACK LIO-4200.
8. LCP-4200 SHALL INCLUDE ALLEN BRADLEY CONTROLLOGIX PLCS.
9. PROVIDE ADDITIONAL PROGRAMMING AS NEEDED FOR COMMUNICATIONS BETWEEN THE EMERGENCY TANK RETURN CONTROL PANEL AND LCP-4200.
10. PROVIDE ADDITIONAL PROGRAMMING AS NEEDED FOR COMMUNICATIONS BETWEEN THE SUPPLY PUMP CONTROL PANEL AND LCP-4200.
11. CE-9100 SHALL BE EQUIPPED TO COMMUNICATE WITH FUTURE PLANTWIDE SCADA.
12. OPERATOR WORKSTATION SCADA SCREEN GRAPHICS SHALL BE MODIFIED TO INCLUDE NEW ADDED EQUIPMENT UNDER THIS CONTRACT.

BID SET

SUBMITTAL DATE: 10/2026

GRAPHIC SCALES CHECK BEFORE USE

IF SHEET IS LESS THAN 22" X 34" IT IS A REDUCED PRINT. SCALE ACCORDINGLY

NO.	DATE	REVISIONS/DESCRIPTION	APPR'D.

DESIGNED BY: LH
DRAWN BY: MM
CHECKED BY: CW
DESIGN LEAD: CURT WENDT, PE
PROJECT MANAGER: FRANK VISINGARDI,JR., PE

STATE OF NEW YORK · CURT W. WENDT · 106710 · LICENSED PROFESSIONAL ENGINEER

Environmental Protection

ACCOUNTABLE MANAGER: STELLA UWAECHIE
PORTFOLIO MANAGER: ANDREW NG, P.E.
EXECUTIVE DIRECTOR: KENNETH E. MORIARTY, P.E.

"WARNING-IT IS A VIOLATION, OF THE NEW YORK STATE EDUCATION LAW, SECTION, 7209.2, FOR ANY PERSON, UNLESS (S)HE IS ACTING UNDER THE DIRECTION OF A LICENSED PROFESSIONAL ENGINEER, TO ALTER THIS DOCUMENT IN ANY WAY. IF ALTERED, THE ALTERING PERSON SHALL COMPLY WITH THE REQUIREMENTS OF NEW YORK EDUCATION, LAW, SECTION, 7209.2."

NEW YORK CITY ENVIRONMENTAL PROTECTION
BUREAU OF ENGINEERING DESIGN & CONSTRUCTION
96-05 HORACE HARDING EXPRESSWAY 5th FLOOR
CORONA, NEW YORK 11368
www.nyc.gov/dep

CAPITAL PROJECT WP-282
STATEN ISLAND, NY, OAKWOOD BEACH WRRF
CONTRACT OB-144A

CONTROL SYSTEM ARCHITECTURE

DATE: OCTOBER 2026
SHEET NO: 58 OF 74
DRAWING NO. GI-002.00

Last Saved By:ZALBER Last Date Saved:7/8/2026 9:40 AM Date & Time Plotted: 9/9/2026 11:34 AM
Paper Size Printed/Plotted: ANSI full bleed D (34.00 x 22.00 Inches) Plot Scale:1:1 Plot Style Table: DEP_BEDC_22x34_ByWeight.ctb
Drawing File Name & Drive Location: C:\pwworking\east01\d4119068\GI-002.00.dwg
All inquiries regarding this drawing(s) or project should be made to NYC Environmental Protection, Bureau of Engineering Design and Construction.

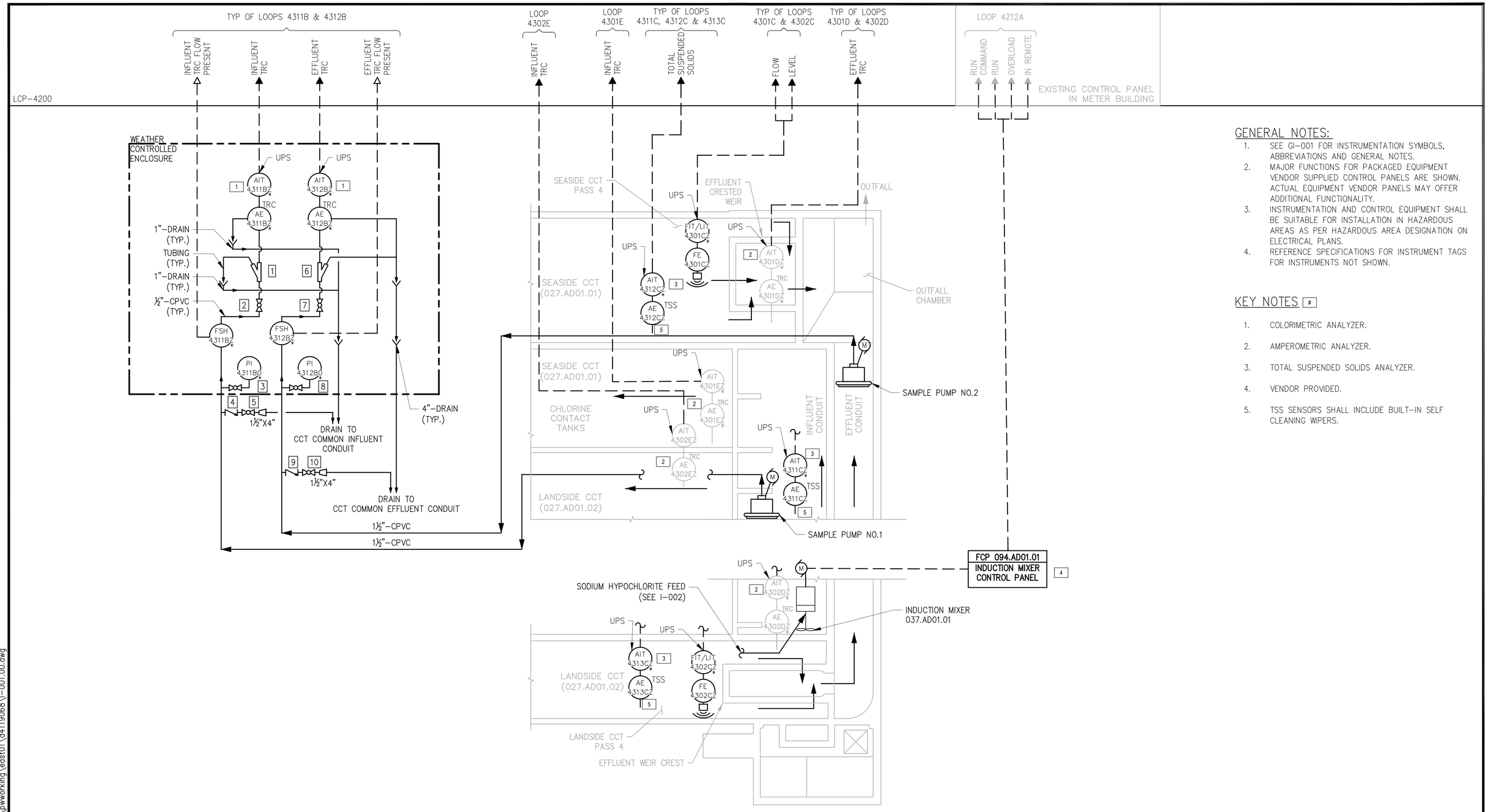

GENERAL NOTES:

1. SEE GI-001 FOR INSTRUMENTATION SYMBOLS, ABBREVIATIONS AND GENERAL NOTES.
2. MAJOR FUNCTIONS FOR PACKAGED EQUIPMENT VENDOR SUPPLIED CONTROL PANELS ARE SHOWN. ACTUAL EQUIPMENT VENDOR PANELS MAY OFFER ADDITIONAL FUNCTIONALITY.
3. INSTRUMENTATION AND CONTROL EQUIPMENT SHALL BE SUITABLE FOR INSTALLATION IN HAZARDOUS AREAS AS PER HAZARDOUS AREA DESIGNATION ON ELECTRICAL PLANS.
4. REFERENCE SPECIFICATIONS FOR INSTRUMENT TAGS FOR INSTRUMENTS NOT SHOWN.

KEY NOTES [#]

1. COLORIMETRIC ANALYZER.
2. AMPEROMETRIC ANALYZER.
3. TOTAL SUSPENDED SOLIDS ANALYZER.
4. VENDOR PROVIDED.
5. TSS SENSORS SHALL INCLUDE BUILT-IN SELF CLEANING WIPERS.

BID SET

SUBMITTAL DATE: 10/2026

GRAPHIC SCALES CHECK BEFORE USE

IF SHEET IS LESS THAN 22" X 34" IT IS A REDUCED PRINT. SCALE ACCORDINGLY

NO.	DATE	REVISIONS/DESCRIPTION	APPR'D.

DESIGNED BY: LH
DRAWN BY: MM
CHECKED BY: CW
DESIGN LEAD: CURT WENDT, PE
PROJECT MANAGER: FRANK VISINGARDI,JR., PE

STATE OF NEW YORK · CURT W. WENDT · 106710 · LICENSED PROFESSIONAL ENGINEER

Environmental Protection

ACCOUNTABLE MANAGER: STELLA UWAECHIE
PORTFOLIO MANAGER: ANDREW NG, P.E.
EXECUTIVE DIRECTOR: KENNETH E. MORIARTY, P.E.

"WARNING-IT IS A VIOLATION, OF THE NEW YORK STATE EDUCATION LAW, SECTION, 7209.2, FOR ANY PERSON, UNLESS (S)HE IS ACTING UNDER THE DIRECTION OF A LICENSED PROFESSIONAL ENGINEER, TO ALTER THIS DOCUMENT IN ANY WAY. IF ALTERED, THE ALTERING PERSON SHALL COMPLY WITH THE REQUIREMENTS OF NEW YORK EDUCATION, LAW, SECTION, 7209.2."

NEW YORK CITY ENVIRONMENTAL PROTECTION
BUREAU OF ENGINEERING DESIGN & CONSTRUCTION
96-05 HORACE HARDING EXPRESSWAY 5th FLOOR
CORONA, NEW YORK 11368
www.nyc.gov/dep

CAPITAL PROJECT WP-282
STATEN ISLAND, NY, OAKWOOD BEACH WRRF
CONTRACT OB-144A

CHLORINE CONTACT TANKS

DATE: OCTOBER 2026
SHEET NO: 59 OF 74
DRAWING NO. I-001.00

Last Saved By:ZALBER Last Date Saved:7/8/2026 9:41 AM Date & Time Plotted: 9/9/2026 11:35 AM
Paper Size Printed/Plotted: ANSI full bleed D (34.00 x 22.00 Inches) Plot Scale:1:1 Plot Style Table: DEP_BEDC_22x34_ByWeight.ctb
Drawing File Name & Drive Location: C:\pwworking\east01\d4119068\I-001.00.dwg

All inquiries regarding this drawing(s) or project should be made to NYC Environmental Protection, Bureau of Engineering Design and Construction.

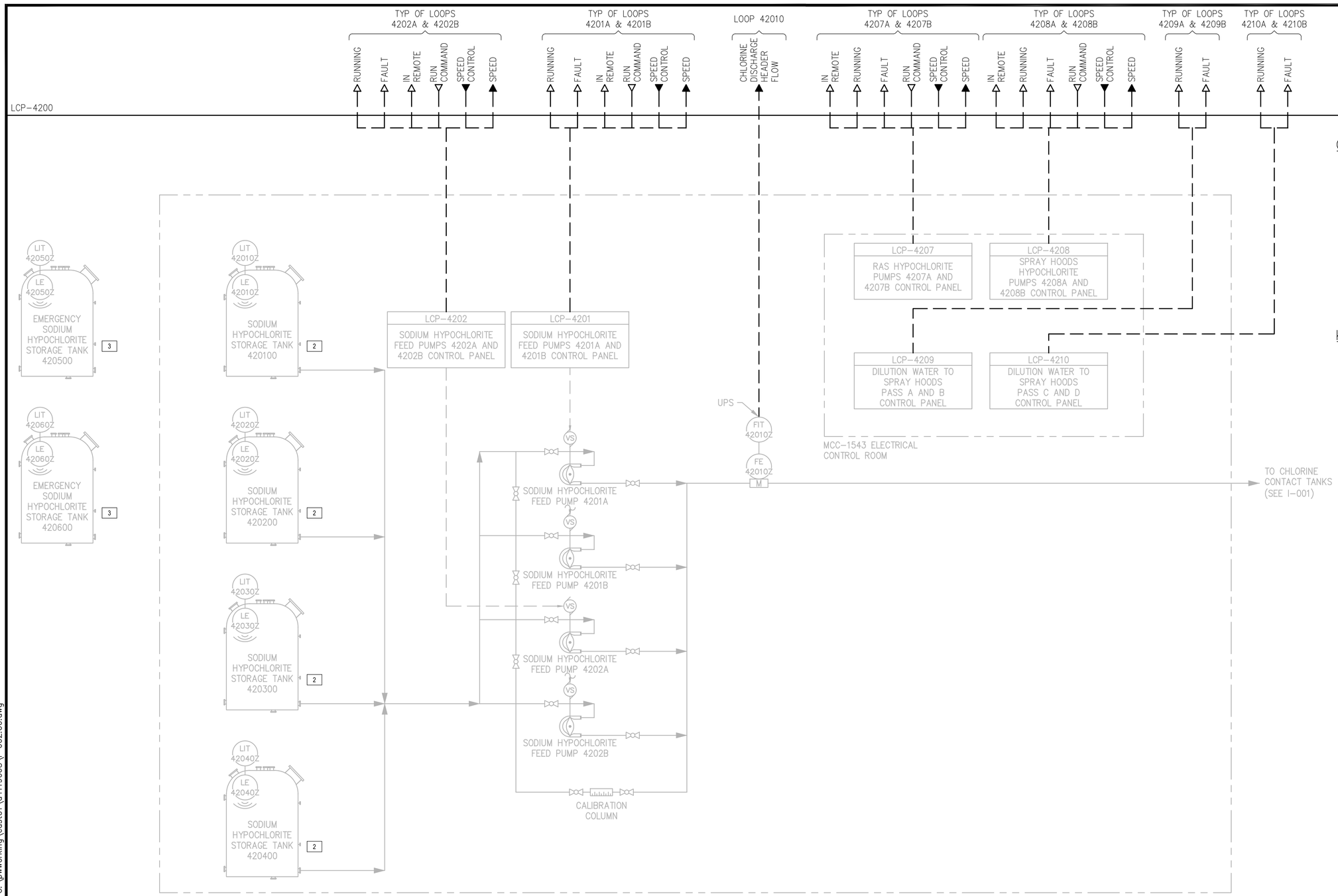

GENERAL NOTES:

1. SEE SHEET GI-001 FOR INSTRUMENTATION SYMBOLS, ABBREVIATIONS AND GENERAL NOTES.
2. MAJOR FUNCTIONS FOR PACKAGED EQUIPMENT VENDOR SUPPLIED CONTROL PANELS ARE SHOWN. ACTUAL EQUIPMENT VENDOR PANELS MAY OFFER ADDITIONAL FUNCTIONALITY.
3. INSTRUMENTATION AND CONTROL EQUIPMENT SHALL BE SUITABLE FOR INSTALLATION IN HAZARDOUS AREAS AS PER HAZARDOUS AREA DESIGNATION ON ELECTRICAL PLANS.
4. REFERENCE SPECIFICATIONS FOR INSTRUMENT TAGS FOR INSTRUMENTS NOT SHOWN.

KEY NOTES [#]

1. EXISTING PIPING AND EQUIPMENT SHOWN FOR THE EXISTING SODIUM HYPOCHLORITE SYSTEM ARE APPROXIMATE REPRESENTATIONS. THEY ARE PROVIDED FOR I/O REQUIREMENTS ONLY.
2. EXISTING SIGNALS FROM STORAGE TANKS AND EMERGENCY SUPPLY PUMPS ARE WIRED TO EXISTING SUPPLY PUMP CONTROL PANEL IN THE CHLORINE BUILDING. PCSS SHALL DEVELOP GRAPHIC DISPLAYS ON THE OITs TO ALLOW MONITORING AND CONTROL OF THESE EXISTING SYSTEMS FROM THE OIT. REFER TO E-009 FOR CHLORINE BUILDING AND METER BUILDING POWER PLAN ON E-007.
3. EXISTING SIGNALS FROM EMERGENCY STORAGE TANKS AND EMERGENCY TANKS RETURN PUMPS ARE WIRED TO EXISTING RETURN PUMP CONTROL PANEL IN THE METER BUILDING. PCSS SHALL DEVELOP GRAPHIC DISPLAYS ON THE OITs TO ALLOW MONITORING AND CONTROL OF THESE EXISTING SYSTEMS FROM THE OIT. REFER TO E-009 FOR CHLORINE BUILDING AND METER BUILDING POWER PLAN ON E-007.

BID SET

SUBMITTAL DATE: 10/2026

GRAPHIC SCALES CHECK BEFORE USE

IF SHEET IS LESS THAN 22" X 34" IT IS A REDUCED PRINT. SCALE ACCORDINGLY

NO.	DATE	REVISIONS/DESCRIPTION	APPR'D.

DESIGNED BY: LH
DRAWN BY: MM
CHECKED BY: CW
DESIGN LEAD: CURT WENDT, PE
PROJECT MANAGER: FRANK VISINGARDI,JR., PE

STATE OF NEW YORK · CURT W. WENDT · 106710 · LICENSED PROFESSIONAL ENGINEER

Environmental Protection

ACCOUNTABLE MANAGER: STELLA UWAECHIE
PORTFOLIO MANAGER: ANDREW NG, P.E.
EXECUTIVE DIRECTOR: KENNETH E. MORIARTY, P.E.

"WARNING-IT IS A VIOLATION, OF THE NEW YORK STATE EDUCATION LAW, SECTION, 7209.2, FOR ANY PERSON, UNLESS (S)HE IS ACTING UNDER THE DIRECTION OF A LICENSED PROFESSIONAL ENGINEER, TO ALTER THIS DOCUMENT IN ANY WAY. IF ALTERED, THE ALTERING PERSON SHALL COMPLY WITH THE REQUIREMENTS OF NEW YORK EDUCATION, LAW, SECTION, 7209.2."

NEW YORK CITY ENVIRONMENTAL PROTECTION
BUREAU OF ENGINEERING DESIGN & CONSTRUCTION
96-05 HORACE HARDING EXPRESSWAY 5th FLOOR
CORONA, NEW YORK 11368
www.nyc.gov/dep

CAPITAL PROJECT WP-282
STATEN ISLAND, NY, OAKWOOD BEACH WRRF
CONTRACT OB-144A

EXISTING SODIUM HYPOCHLORITE BULK STORAGE TANKS AND METERING PUMPS

DATE: OCTOBER 2026
SHEET NO: 60 OF 74
DRAWING NO. I-002.00

Last Saved By:ZALBER Last Date Saved:7/8/2026 9:42 AM Date & Time Plotted: 9/9/2026 11:36 AM
Paper Size Printed/Plotted: ANSI full bleed D (34.00 x 22.00 Inches) Plot Scale:1:1 Plot Style Table: DEP_BEDC_22x34_ByWeight.ctb
Drawing File Name & Drive Location: C:\pwworking\east01\d4119068\I-002.00.dwg
All inquiries regarding this drawing(s) or project should be made to NYC Environmental Protection, Bureau of Engineering Design and Construction.

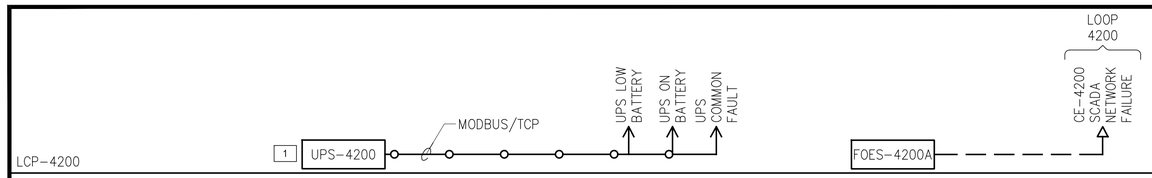

GENERAL NOTES:

1. SEE GI-001 FOR INSTRUMENTATION SYMBOLS, ABBREVIATIONS AND GENERAL NOTES.
2. MAJOR FUNCTIONS FOR PACKAGED EQUIPMENT VENDOR SUPPLIED CONTROL PANELS ARE SHOWN. ACTUAL EQUIPMENT VENDOR PANELS MAY OFFER ADDITIONAL FUNCTIONALITY.
3. INSTRUMENTATION AND CONTROL EQUIPMENT SHALL BE SUITABLE FOR INSTALLATION IN HAZARDOUS AREAS AS PER HAZARDOUS AREA DESIGNATION ON ELECTRICAL PLANS.
4. REFERENCE SPECIFICATIONS FOR INSTRUMENT TAGS FOR INSTRUMENTS NOT SHOWN.

KEY NOTES [#]

1. INSTALL UPS-4200 INSIDE LCP-4200. UPS SOFTWARE SHALL COMMUNICATE VIA ETHERNET MODBUS/TCP WITH FIBER OPTIC ETHERNET SWITCH (F0ES-4200A).

BID SET

SUBMITTAL DATE: 10/2026

GRAPHIC SCALES CHECK BEFORE USE

IF SHEET IS LESS THAN 22" X 34" IT IS A REDUCED PRINT. SCALE ACCORDINGLY

NO.	DATE	REVISIONS/DESCRIPTION	APPR'D.

DESIGNED BY: LH
DRAWN BY: MM
CHECKED BY: CW
DESIGN LEAD: CURT WENDT, PE
PROJECT MANAGER: FRANK VISINGARDI,JR., PE

STATE OF NEW YORK · CURT W. WENDT · 106710 · LICENSED PROFESSIONAL ENGINEER

Environmental Protection

ACCOUNTABLE MANAGER: STELLA UWAECHIE
PORTFOLIO MANAGER: ANDREW NG, P.E.
EXECUTIVE DIRECTOR: KENNETH E. MORIARTY, P.E.

"WARNING-IT IS A VIOLATION, OF THE NEW YORK STATE EDUCATION LAW, SECTION, 7209.2, FOR ANY PERSON, UNLESS (S)HE IS ACTING UNDER THE DIRECTION OF A LICENSED PROFESSIONAL ENGINEER, TO ALTER THIS DOCUMENT IN ANY WAY. IF ALTERED, THE ALTERING PERSON SHALL COMPLY WITH THE REQUIREMENTS OF NEW YORK EDUCATION, LAW, SECTION, 7209.2."

NEW YORK CITY ENVIRONMENTAL PROTECTION
BUREAU OF ENGINEERING DESIGN & CONSTRUCTION
96-05 HORACE HARDING EXPRESSWAY 5th FLOOR
CORONA, NEW YORK 11368
www.nyc.gov/dep

CAPITAL PROJECT WP-282
STATEN ISLAND, NY, OAKWOOD BEACH WRRF
CONTRACT OB-144A

MISCELLANEOUS SYSTEMS

DATE: OCTOBER 2026
SHEET NO: 61 OF 74
DRAWING NO. I-003.00

All inquiries regarding this drawing(s) or project should be made to NYC Environmental Protection, Bureau of Engineering Design and Construction.

Last Saved By: ZALBER Last Date Saved: 7/8/2026 9:42 AM Date & Time Plotted: 9/9/2026 11:37 AM
Paper Size Printed/Plotted: ANSI full bleed D (34.00 x 22.00 Inches) Plot Scale:1:1 Plot Style Table: DEP_BEDC_22x34_ByWeight.ctb
Drawing File Name & Drive Location: C:\pwworking\east01\d4119068\I-003.00.dwg

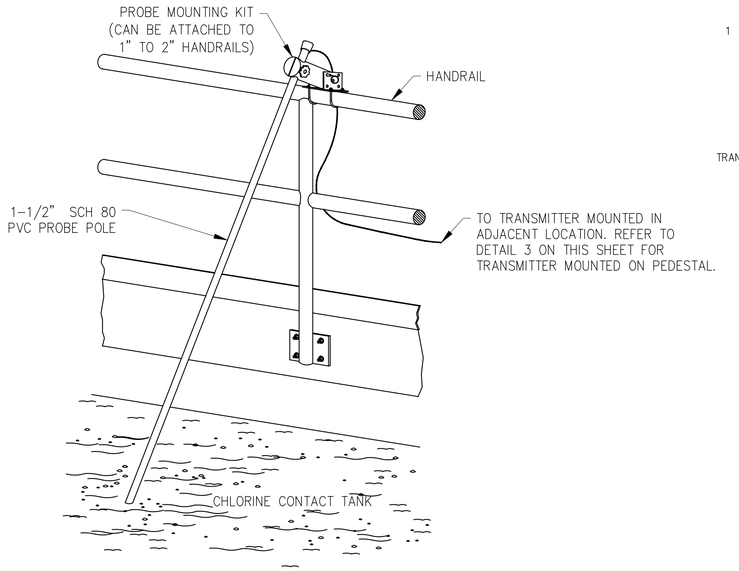

NOTE

1. THE MOUNTING BRACKET FOR THE TRC PROBE SHOULD BE CAPABLE OF PIVOTING TO ALLOW THE PROBES TO BE SWUNG UP TO THE SIDE AND UP TO THE HANDRAILS FOR ACCESS.
2. PROVIDE SUFFICIENT LENGTH OF SENSOR CABLE TO ENABLE REMOVAL AND MAINTENANCE OF SENSOR. SECURE NEATLY COIL EXCESS OF CABLE.

1 – TRC ANALYZER PROBE MOUNTING DETAIL

SCALE: N.T.S.

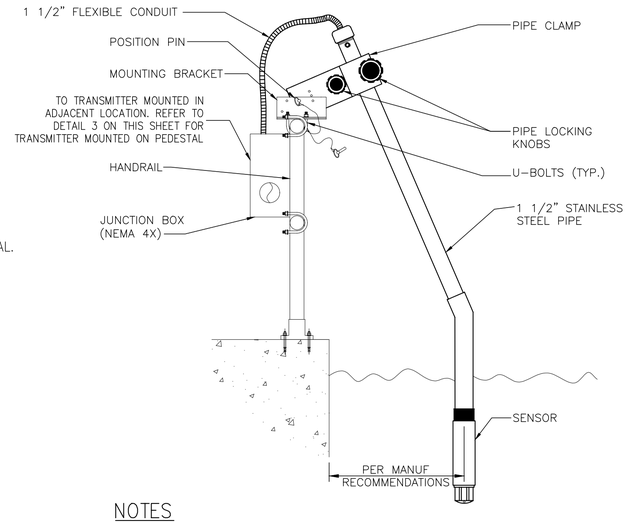

NOTES

1. MANUFACTURER'S STANDARD MOUNTING BRACKETS DIFFERING IN MECHANICAL DETAIL, BUT PROVIDING ALL FUNCTIONALITY, ACCESSIBILITY, AND MAINTAINABILITY OF THE DEPICTED DETAIL ARE ACCEPTABLE SUBJECT TO ENGINEER'S APPROVAL.
2. MOUNT PER MANUFACTURERS RECOMMENDED DEPTH.
3. TSS ANALYZER SHALL INCLUDE BUILT IN SELF CLEANING WIPERS. NO EXTERNAL CLEANING ASSEMBLIES SHALL BE INSTALLED.
4. PROVIDE SUFFICIENT LENGTH OF SENSOR TO ENABLE REMOVAL AND MAINTENANCE OF SENSOR. SECURE NEATLY COIL EXCESS OF CABLE

2 – TOTAL SUSPENDED SOLIDS ANALYTICAL INSTRUMENT SENSOR

SCALE: N.T.S.

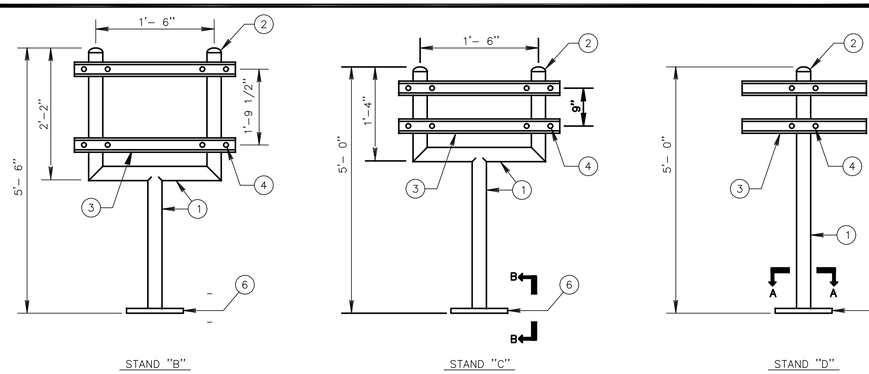

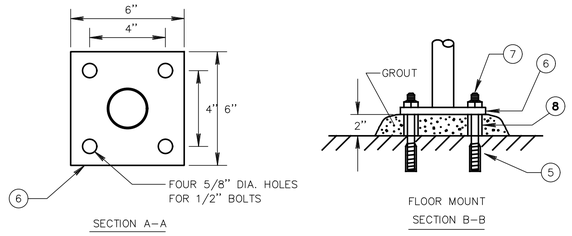

MATERIAL LIST		
ITEM	DESCRIPTION	SPEC
1	2" SCH. 40 PIPE	CS
2	2" BUTTWELD CAP	CS
3	13/16"UNISTRUT	GALV.
4	2" "U"-BOLTS	GALV.
5	1/2" ANCHOR	EPCON
6	1/2" PLATE	CS
7	1/2" ALLTHREAD ROD	CS
8	3/4" SLEEVE	CS
9	UNISTRUT SPRING NUTS	GALV.

NOTES

1. ALL INSTRUMENT MOUNTING STANDS TO BE PREPARED AND PAINTED AS PER PROTECTIVE COATINGS SPECIFICATION WITH FINISH COAT COLOR MACHINE GRAY.
2. ATTACH INSTRUMENTS TO UNISTRUT USING UNISTRUT SPRING NUTS.
3. USE UNPAINTED ALUMINUM IN CORROSIVE AREAS.
4. INSTRUMENT MOUNTING STAND SHALL BE DESIGNED SO IT DOES NOT COLLAPSE IN A WIND OR SNOW LOAD.

3 – MOUNTING STANDS FOR FIELD INSTRUMENT

SCALE: N.T.S.

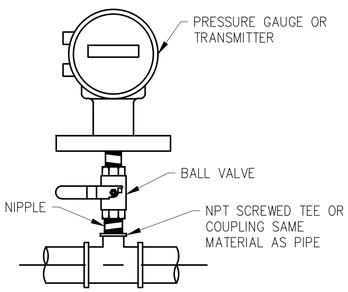

NOTE

1. PRESSURE GAUGE/DIAPHRAGM SEAL/BALL VALVE ASSEMBLY SHALL BE ASSEMBLED AND TESTED IN THE SHOP AS REQUIRED.

4 – PRESSURE GAUGE OR TRANSMITTER DETAIL

SCALE: N.T.S.

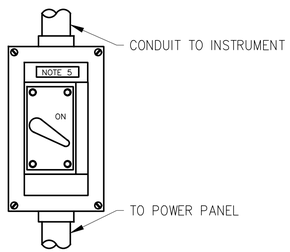

NOTES

1. SINGLE-PHASE, MANUAL SWITCH REQUIRED FOR EACH AC POWERED FIELD INSTRUMENT.
2. OPERATING HANDLE PAD-LOCKABLE IN OFF POSITION.
3. POLYCARBONATE FOR INSTALLATIONS WITHIN THE CHLORINE BUILDING. 316 STAINLESS STEEL FOR ALL OTHER LOCATIONS. NEMA 4X ENCLOSURE.
4. NAME PLATE ATTACHED SECURELY. ENGRAVED WITH INSTRUMENT TAG NUMBER AND DESCRIPTION.

5 – INSTRUMENT POWER DISCONNECT

SCALE: N.T.S.

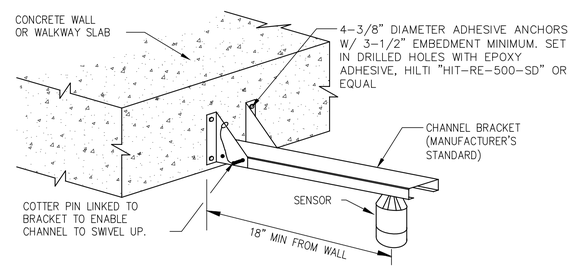

NOTES

1. MANUFACTURER'S CABLE TO TRANSMITTER NOT SHOWN. PROVIDE SUFFICIENT LENGTH OF FLEXIBLE CONDUIT TO FACILITATE REMOVAL OF SENSOR.

6 – ULTRASONIC LEVEL SENSOR MOUNTING DETAIL

SCALE: N.T.S.

BID SET

SUBMITTAL DATE: 10/2026

GRAPHIC SCALES CHECK BEFORE USE

IF SHEET IS LESS THAN 22" X 34" IT IS A REDUCED PRINT. SCALE ACCORDINGLY

NO.	DATE	REVISIONS/DESCRIPTION	APPR'D.

DESIGNED BY: LH
DRAWN BY: MM
CHECKED BY: CW
DESIGN LEAD: CURT WENDT, PE
PROJECT MANAGER: FRANK VISINGARDI,JR., PE

ACCOUNTABLE MANAGER: STELLA UWAECHIE
PORTFOLIO MANAGER: ANDREW NG, P.E.
EXECUTIVE DIRECTOR: KENNETH E. MORIARTY, P.E.

"WARNING-IT IS A VIOLATION, OF THE NEW YORK STATE EDUCATION LAW, SECTION, 7209.2, FOR ANY PERSON, UNLESS (S)HE IS ACTING UNDER THE DIRECTION OF A LICENSED PROFESSIONAL ENGINEER, TO ALTER THIS DOCUMENT IN ANY WAY. IF ALTERED, THE ALTERING PERSON SHALL COMPLY WITH THE REQUIREMENTS OF NEW YORK EDUCATION, LAW, SECTION, 7209.2."

NEW YORK CITY ENVIRONMENTAL PROTECTION
BUREAU OF ENGINEERING DESIGN & CONSTRUCTION
96-05 HORACE HARDING EXPRESSWAY 5th FLOOR
CORONA, NEW YORK 11368
www.nyc.gov/dep

CAPITAL PROJECT WP-282
STATEN ISLAND, NY, OAKWOOD BEACH WRRF
CONTRACT OB-144A

STANDARD DETAILS

DATE: OCTOBER 2026
SHEET NO: 62 OF 74
DRAWING NO. I-004.00

Last Saved By:ZALBER Last Date Saved:7/8/2026 9:43 AM Date & Time Plotted: 9/9/2026 11:38 AM
Paper Size Printed/Plotted: ANSI full bleed D (34.00 x 22.00 Inches) Plot Scale:1:1 Plot Style Table: DEP_BEDC_22x34_ByWeight.ctb
Drawing File Name & Drive Location: C:\pwworking\east01\d4119068\I-004.00.dwg

All inquiries regarding this drawing(s) or project should be made to NYC Environmental Protection, Bureau of Engineering Design and Construction.

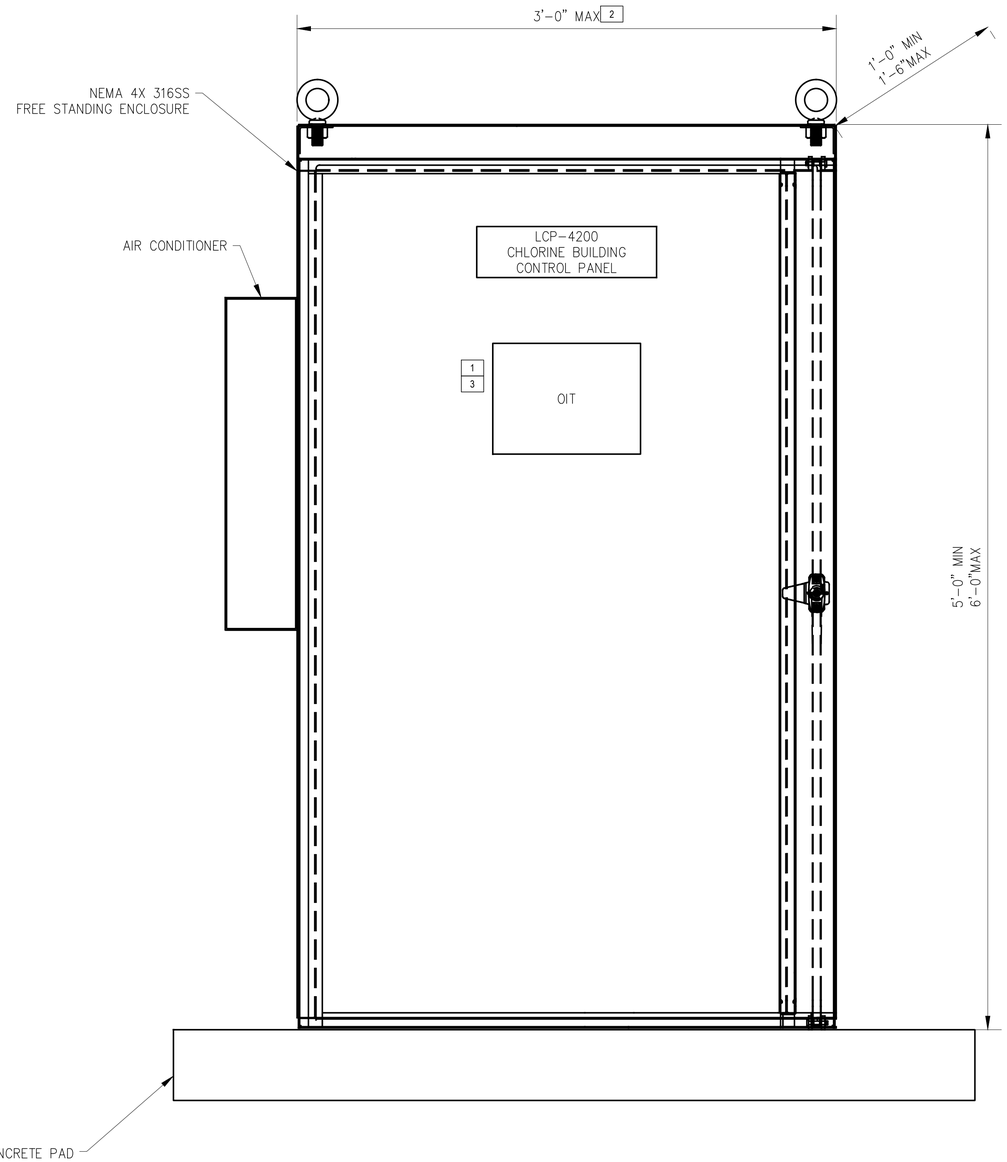

KEY NOTES

1. OIT SHALL BE ALLEN BRADLEY PANEL VIEW PLUS (MINIMUM SIZE 15").
2. ENCLOSURE DOOR WIDTH SHALL NOT EXCEED 36 INCHES. REFER TO SECTION 40 67 16 FOR ADDITIONAL ENCLOSURE REQUIREMENTS.
3. OIT SHALL BE MOUNTED AT OPERATOR'S EYE LEVEL. REFER TO SECTION 40 67 16 FOR REQUIREMENTS.

BID SET

SUBMITTAL DATE: 10/2026

GRAPHIC SCALES CHECK BEFORE USE

IF SHEET IS LESS THAN 22" X 34" IT IS A REDUCED PRINT. SCALE ACCORDINGLY

NO.	DATE	REVISIONS/DESCRIPTION	APPR'D.

DESIGNED BY: LH
DRAWN BY: MM
CHECKED BY: CW
DESIGN LEAD: CURT WENDT, PE
PROJECT MANAGER: FRANK VISINGARDI,JR., PE

STATE OF NEW YORK CURT W. WENDT 106710 LICENSED PROFESSIONAL ENGINEER

Environmental Protection

ACCOUNTABLE MANAGER: STELLA UWAECHIE
PORTFOLIO MANAGER: ANDREW NG, P.E.
EXECUTIVE DIRECTOR: KENNETH E. MORIARTY, P.E.

"WARNING-IT IS A VIOLATION, OF THE NEW YORK STATE EDUCATION LAW, SECTION, 7209.2, FOR ANY PERSON, UNLESS (S)HE IS ACTING UNDER THE DIRECTION OF A LICENSED PROFESSIONAL ENGINEER, TO ALTER THIS DOCUMENT IN ANY WAY. IF ALTERED, THE ALTERING PERSON SHALL COMPLY WITH THE REQUIREMENTS OF NEW YORK EDUCATION, LAW, SECTION, 7209.2."

NEW YORK CITY ENVIRONMENTAL PROTECTION
BUREAU OF ENGINEERING DESIGN & CONSTRUCTION
96-05 HORACE HARDING EXPRESSWAY 5th FLOOR
CORONA, NEW YORK 11368
www.nyc.gov/dep

CAPITAL PROJECT WP-282
STATEN ISLAND, NY, OAKWOOD BEACH WRRF
CONTRACT OB-144A

LCP-4200 ELEVATION

DATE: OCTOBER 2026
SHEET NO: 63 OF 74
DRAWING NO. I-005.00

Last Saved By: ZALBER Last Date Saved: 7/8/2026 9:45 AM Date & Time Plotted: 9/9/2026 11:39 AM
Paper Size Printed/Plotted: ANSI full bleed D (34.00 x 22.00 Inches) Plot Scale:1:1 Plot Style Table: DEP_BEDC_22x34_ByWeight.ctb
Drawing File Name & Drive Location: C:\pwworking\east01\d4119068\I-005.00.dwg

All inquiries regarding this drawing(s) or project should be made to NYC Environmental Protection, Bureau of Engineering Design and Construction.

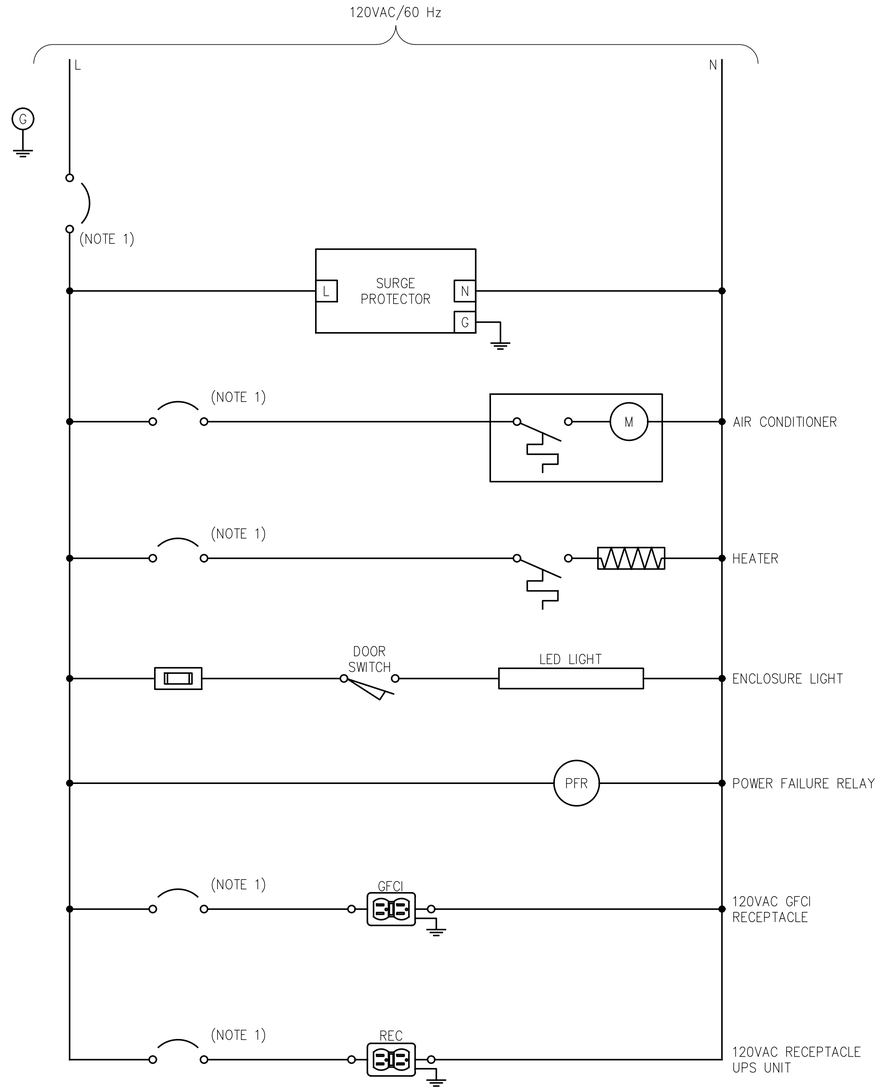

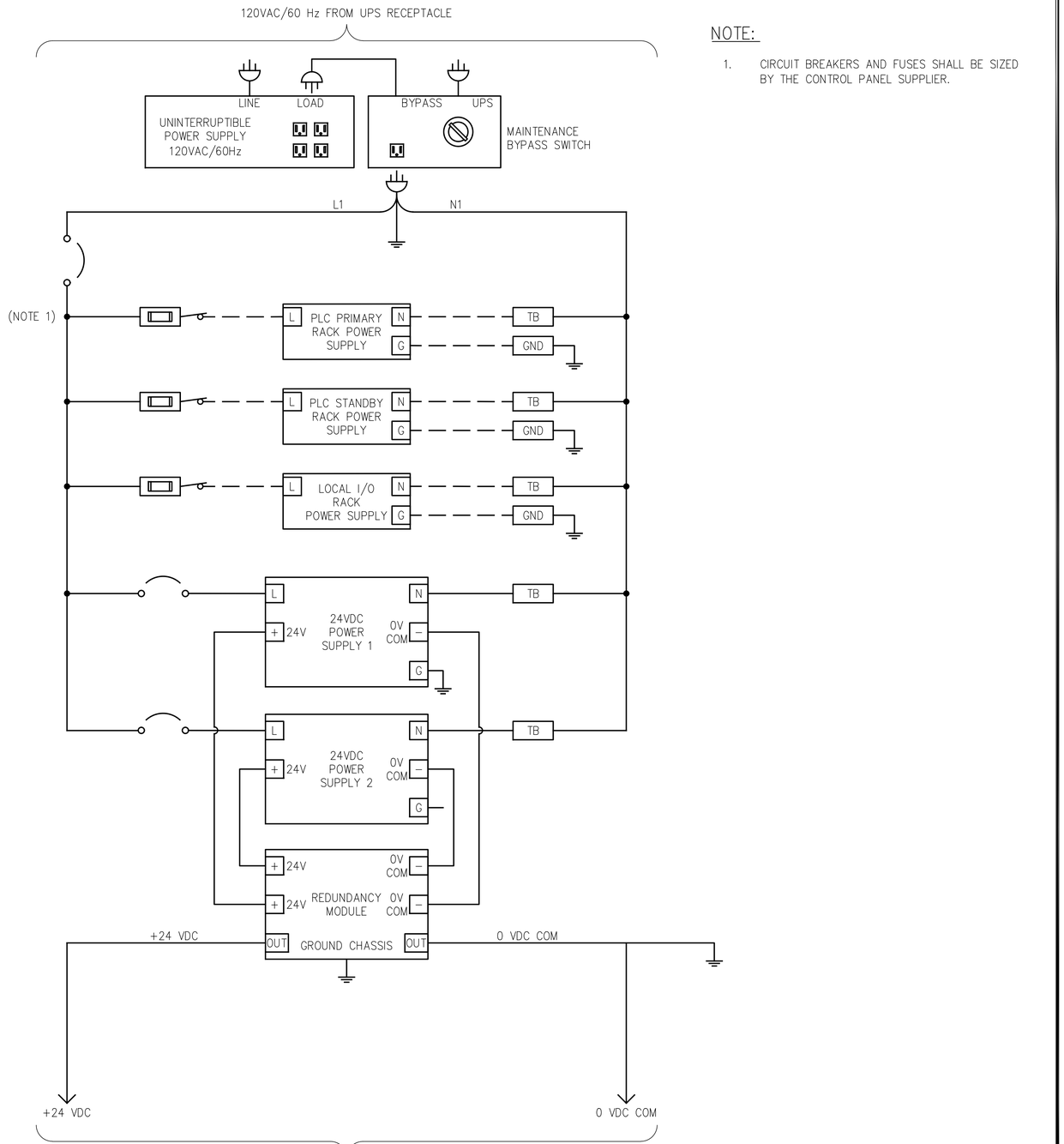

NOTE:

1. CIRCUIT BREAKERS AND FUSES SHALL BE SIZED BY THE CONTROL PANEL SUPPLIER.

BID SET

SUBMITTAL DATE: 10/2026

GRAPHIC SCALES CHECK BEFORE USE

IF SHEET IS LESS THAN 22" X 34" IT IS A REDUCED PRINT. SCALE ACCORDINGLY

NO.	DATE	REVISIONS/DESCRIPTION	APPR'D.

DESIGNED BY: LH
DRAWN BY: MM
CHECKED BY: CW
DESIGN LEAD: CURT WENDT, PE
PROJECT MANAGER: FRANK VISINGARDI,JR., PE

ACCOUNTABLE MANAGER: STELLA UWAECHIE
PORTFOLIO MANAGER: ANDREW NG, P.E.
EXECUTIVE DIRECTOR: KENNETH E. MORIARTY, P.E.

"WARNING-IT IS A VIOLATION, OF THE NEW YORK STATE EDUCATION LAW, SECTION, 7209.2, FOR ANY PERSON, UNLESS (S)HE IS ACTING UNDER THE DIRECTION OF A LICENSED PROFESSIONAL ENGINEER, TO ALTER THIS DOCUMENT IN ANY WAY. IF ALTERED, THE ALTERING PERSON SHALL COMPLY WITH THE REQUIREMENTS OF NEW YORK EDUCATION, LAW, SECTION, 7209.2."

NEW YORK CITY ENVIRONMENTAL PROTECTION
BUREAU OF ENGINEERING DESIGN & CONSTRUCTION
96-05 HORACE HARDING EXPRESSWAY 5th FLOOR
CORONA, NEW YORK 11368
www.nyc.gov/dep

CAPITAL PROJECT WP-282
STATEN ISLAND, NY, OAKWOOD BEACH WRRF
CONTRACT OB-144A

PLC-4200 POWER DISTRIBUTION
SHEET 1 OF 2

DATE: OCTOBER 2026
SHEET NO: 64 OF 74
DRAWING NO. I-006.00

Last Saved By:ZALBER Last Date Saved:7/8/2026 9:45 AM Date & Time Plotted: 9/9/2026 11:40 AM
Paper Size Printed/Plotted: ANSI full bleed D (34.00 x 22.00 Inches) Plot Scale:1:1 Plot Style Table: DEP_BEDC_22x34_ByWeight.ctb
Drawing File Name & Drive Location: C:\pwworking\east01\d4119068\I-006.00.dwg
All inquiries regarding this drawing(s) or project should be made to NYC Environmental Protection, Bureau of Engineering Design and Construction.

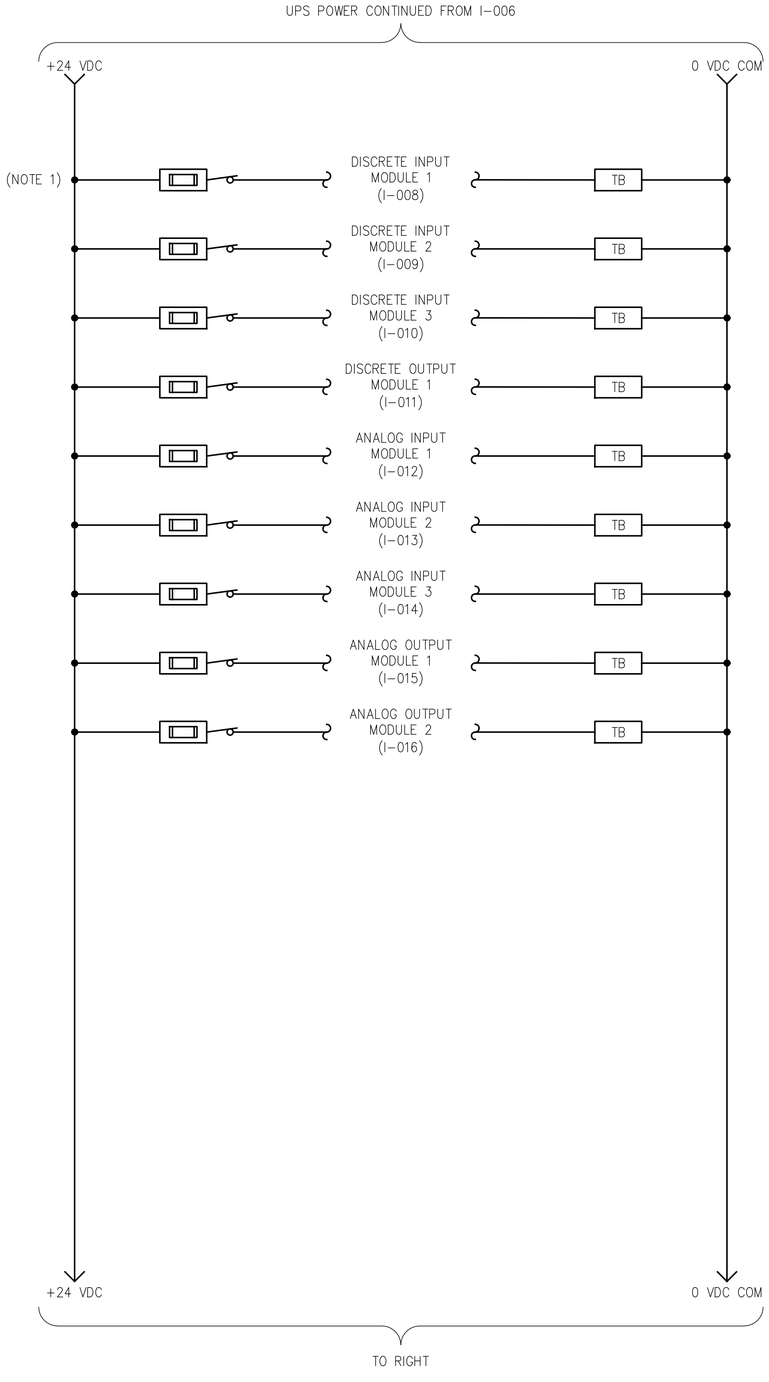

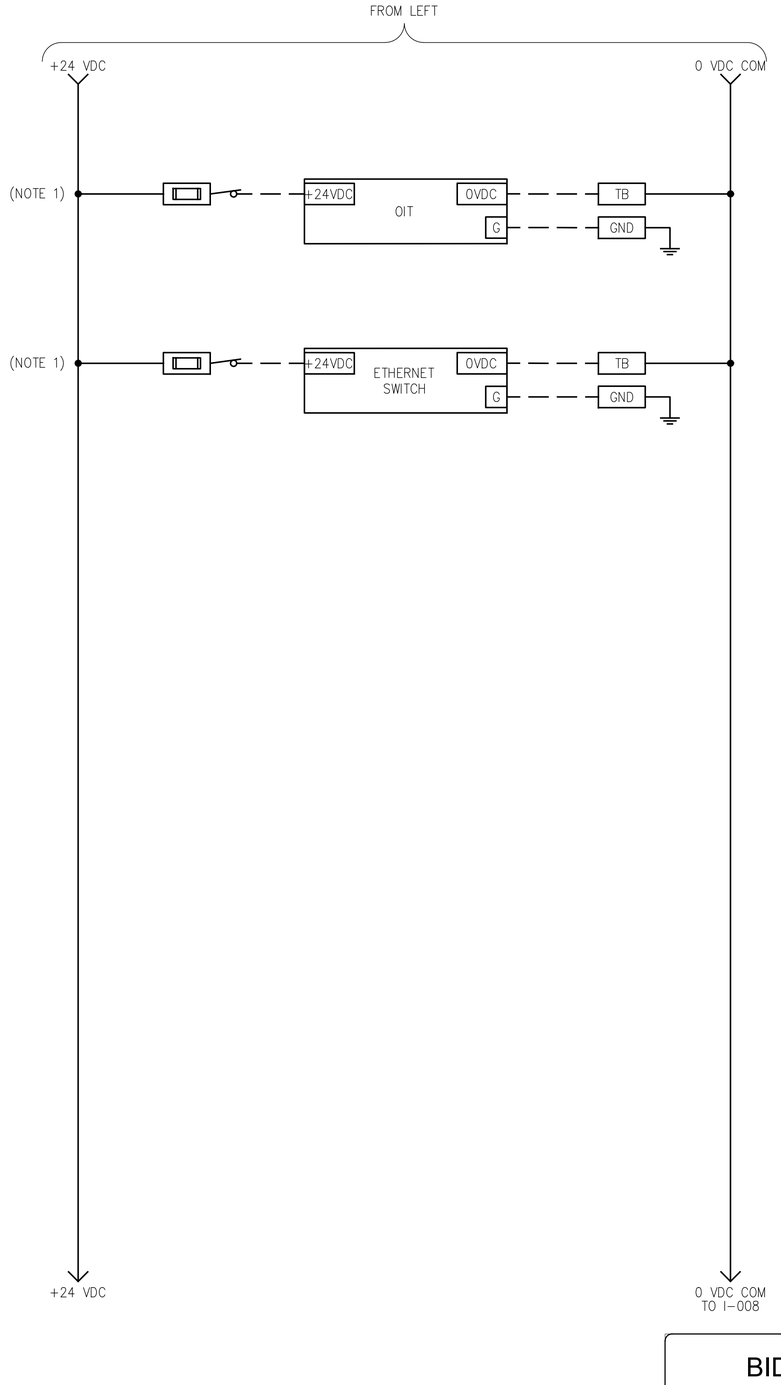

NOTE:

1. CIRCUIT BREAKERS AND FUSES SHALL BE SIZED BY THE CONTROL PANEL SUPPLIER.

BID SET

SUBMITTAL DATE: 10/2026

GRAPHIC SCALES CHECK BEFORE USE

IF SHEET IS LESS THAN 22" X 34" IT IS A REDUCED PRINT. SCALE ACCORDINGLY

NO.	DATE	REVISIONS/DESCRIPTION	APPR'D.

DESIGNED BY: LH
DRAWN BY: MM
CHECKED BY: CW
DESIGN LEAD: CURT WENDT, PE
PROJECT MANAGER: FRANK VISINGARDI,JR., PE

STATE OF NEW YORK · CURT W. WENDT · 106710 · LICENSED PROFESSIONAL ENGINEER

Environmental Protection

ACCOUNTABLE MANAGER: STELLA UWAECHIE
PORTFOLIO MANAGER: ANDREW NG, P.E.
EXECUTIVE DIRECTOR: KENNETH E. MORIARTY, P.E.

"WARNING-IT IS A VIOLATION, OF THE NEW YORK STATE EDUCATION LAW, SECTION, 7209.2, FOR ANY PERSON, UNLESS (S)HE IS ACTING UNDER THE DIRECTION OF A LICENSED PROFESSIONAL ENGINEER, TO ALTER THIS DOCUMENT IN ANY WAY. IF ALTERED, THE ALTERING PERSON SHALL COMPLY WITH THE REQUIREMENTS OF NEW YORK EDUCATION, LAW, SECTION, 7209.2."

NEW YORK CITY ENVIRONMENTAL PROTECTION
BUREAU OF ENGINEERING DESIGN & CONSTRUCTION
96-05 HORACE HARDING EXPRESSWAY 5th FLOOR
CORONA, NEW YORK 11368
www.nyc.gov/dep

CAPITAL PROJECT WP-282
STATEN ISLAND, NY, OAKWOOD BEACH WRRF
CONTRACT OB-144A

PLC-4200 POWER DISTRIBUTION
SHEET 2 OF 2

DATE: OCTOBER 2026
SHEET NO: 65 OF 74
DRAWING NO. I–007.00

Last Saved By: ZALBER Last Date Saved: 7/8/2026 9:46 AM Date & Time Plotted: 9/9/2026 11:41 AM
Paper Size Printed/Plotted: ANSI full bleed D (34.00 x 22.00 Inches) Plot Scale:1:1 Plot Style Table: DEP_BEDC_22x34_ByWeight.ctb
Drawing File Name & Drive Location: C:\pwworking\east01\d4119068\I–007.00.dwg

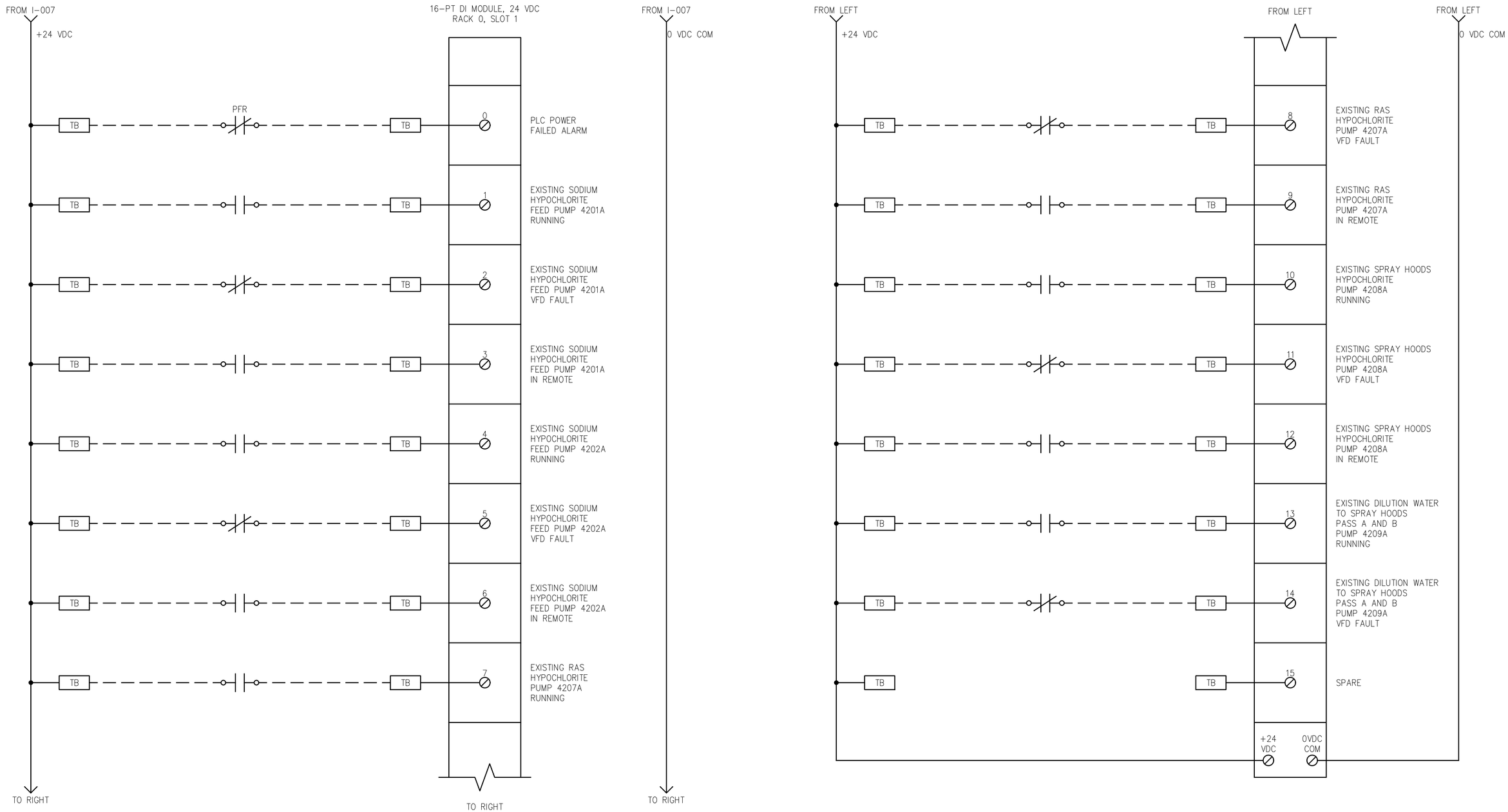

BID SET

SUBMITTAL DATE: 10/2026

GRAPHIC SCALES CHECK BEFORE USE

IF SHEET IS LESS THAN 22" X 34" IT IS A REDUCED PRINT. SCALE ACCORDINGLY

NO.	DATE	REVISIONS/DESCRIPTION	APPR'D.

DESIGNED BY: LH
DRAWN BY: MM
CHECKED BY: CW
DESIGN LEAD: CURT WENDT, PE
PROJECT MANAGER: FRANK VISINGARDI JR., PE

STATE OF NEW YORK · CURT W. WENDT · 106710 · LICENSED PROFESSIONAL ENGINEER

Environmental Protection

ACCOUNTABLE MANAGER: STELLA UWAECHIE
PORTFOLIO MANAGER: ANDREW NG, P.E.
EXECUTIVE DIRECTOR: KENNETH E. MORIARTY, P.E.

"WARNING-IT IS A VIOLATION, OF THE NEW YORK STATE EDUCATION LAW, SECTION, 7209.2, FOR ANY PERSON, UNLESS (S)HE IS ACTING UNDER THE DIRECTION OF A LICENSED PROFESSIONAL ENGINEER, TO ALTER THIS DOCUMENT IN ANY WAY. IF ALTERED, THE ALTERING PERSON SHALL COMPLY WITH THE REQUIREMENTS OF NEW YORK EDUCATION, LAW, SECTION, 7209.2."

NEW YORK CITY ENVIRONMENTAL PROTECTION
BUREAU OF ENGINEERING DESIGN & CONSTRUCTION
96-05 HORACE HARDING EXPRESSWAY 5th FLOOR
CORONA, NEW YORK 11368
www.nyc.gov/dep

CAPITAL PROJECT WP-282
STATEN ISLAND, NY, OAKWOOD BEACH WRRF
CONTRACT OB-144A

PLC-4200 DIGITAL INPUT MODULE
SHEET 1 OF 3

DATE: OCTOBER 2026
SHEET NO: 66 OF 74
DRAWING NO. I-008.00

Last Saved By: ZALBER Last Date Saved: 7/8/2026 9:47 AM Date & Time Plotted: 9/9/2026 11:41 AM
Paper Size Printed/Plotted: ANSI full bleed D (34.00 x 22.00 Inches) Plot Scale:1:1 Plot Style Table: DEP_BEDC_22x34_ByWeight.ctb
Drawing File Name & Drive Location: C:\pwworking\east01\d4119068\I-008.00.dwg

All inquiries regarding this drawing(s) or project should be made to NYC Environmental Protection, Bureau of Engineering Design and Construction.

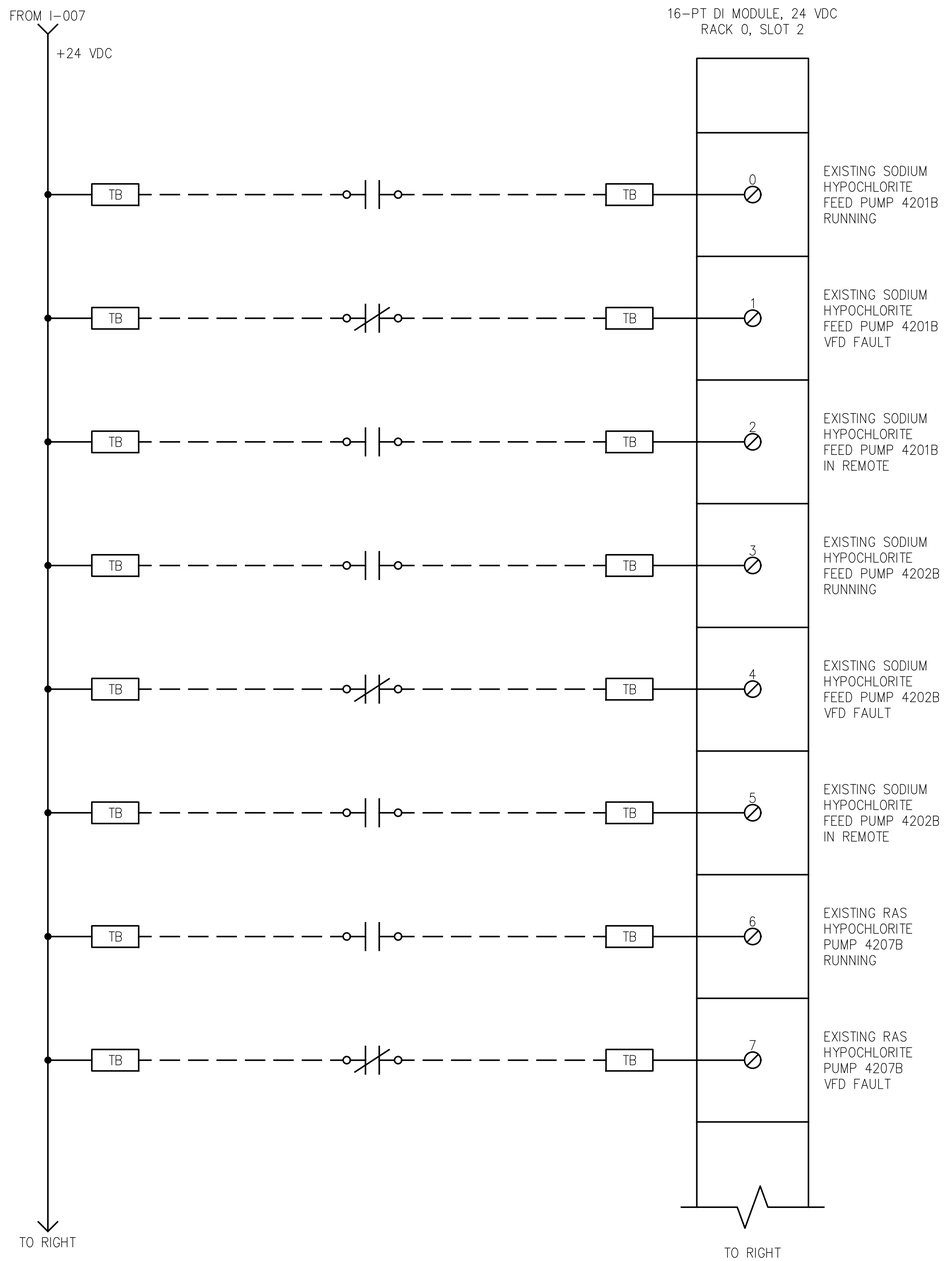

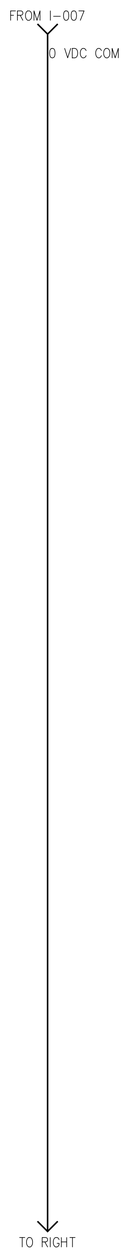

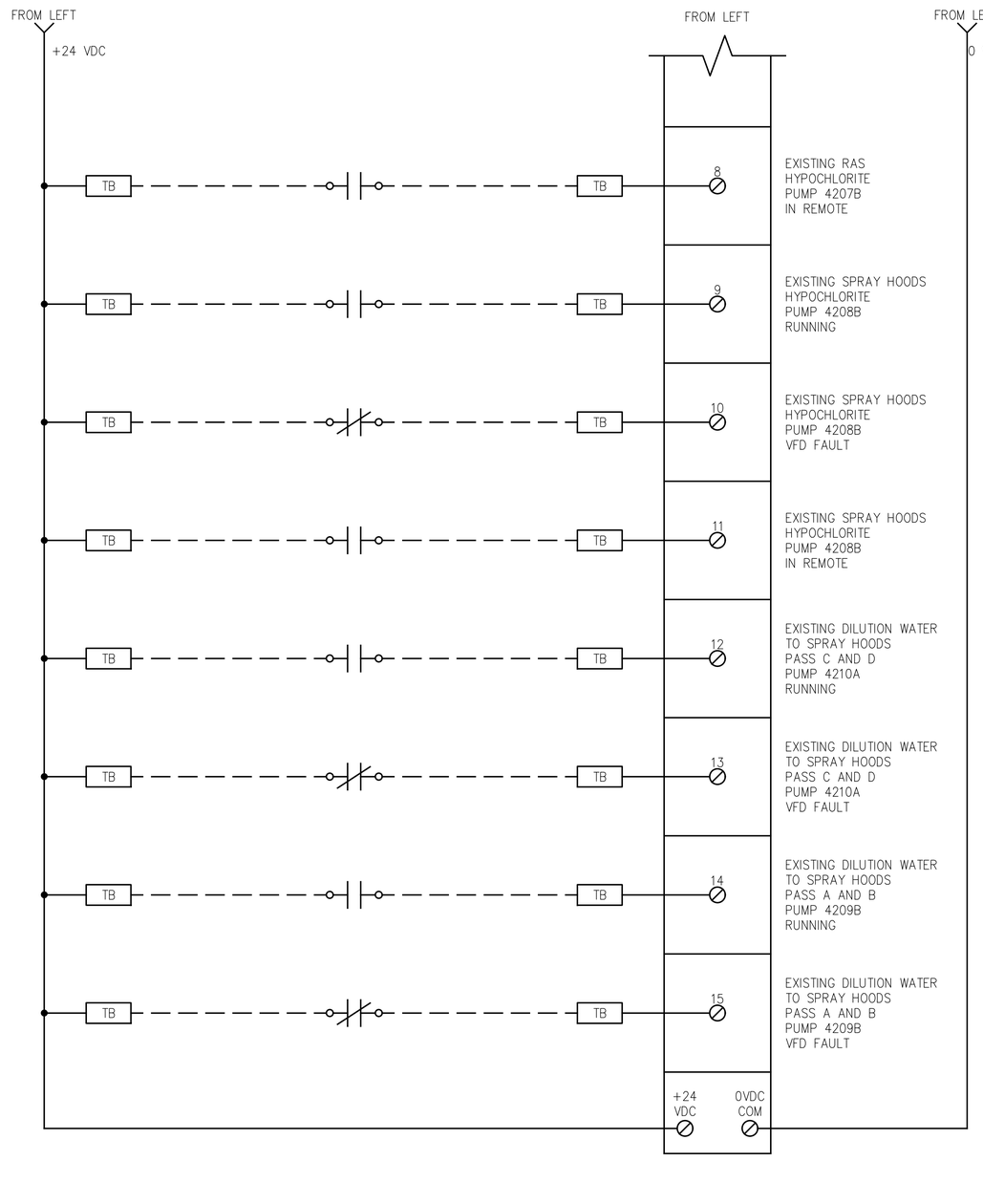

BID SET

SUBMITTAL DATE: 10/2026

GRAPHIC SCALES CHECK BEFORE USE

IF SHEET IS LESS THAN 22" X 34" IT IS A REDUCED PRINT. SCALE ACCORDINGLY

NO.	DATE	REVISIONS/DESCRIPTION	APPR'D.

DESIGNED BY: LH
DRAWN BY: MM
CHECKED BY: CW
DESIGN LEAD: CURT WENDT, PE
PROJECT MANAGER: FRANK VISINGARDI, JR., PE

STATE OF NEW YORK · CURT W. WENDT · 106710 · LICENSED PROFESSIONAL ENGINEER

Environmental Protection

ACCOUNTABLE MANAGER: STELLA UWAECHIE
PORTFOLIO MANAGER: ANDREW NG, P.E.
EXECUTIVE DIRECTOR: KENNETH E. MORIARTY, P.E.

"WARNING-IT IS A VIOLATION, OF THE NEW YORK STATE EDUCATION LAW, SECTION, 7209.2, FOR ANY PERSON, UNLESS (S)HE IS ACTING UNDER THE DIRECTION OF A LICENSED PROFESSIONAL ENGINEER, TO ALTER THIS DOCUMENT IN ANY WAY. IF ALTERED, THE ALTERING PERSON SHALL COMPLY WITH THE REQUIREMENTS OF NEW YORK EDUCATION, LAW, SECTION, 7209.2."

NEW YORK CITY ENVIRONMENTAL PROTECTION
BUREAU OF ENGINEERING DESIGN & CONSTRUCTION
96-05 HORACE HARDING EXPRESSWAY 5th FLOOR
CORONA, NEW YORK 11368
www.nyc.gov/dep

CAPITAL PROJECT WP-282
STATEN ISLAND, NY, OAKWOOD BEACH WRRF
CONTRACT OB-144A

PLC-4200 DIGITAL INPUT MODULE
SHEET 2 OF 3

DATE: OCTOBER 2026
SHEET NO: 67 OF 74
DRAWING NO. I–009.00

Last Saved By: ZALBER Last Date Saved: 7/8/2026 9:48 AM Date & Time Plotted: 9/9/2026 11:42 AM
Paper Size Printed/Plotted: ANSI full bleed D (34.00 x 22.00 Inches) Plot Scale: 1:1 Plot Style Table: DEP_BEDC_22x34_ByWeight.ctb
Drawing File Name & Drive Location: C:\pwworking\east01\d4119068\I–009.00.dwg

All inquiries regarding this drawing(s) or project should be made to NYC Environmental Protection, Bureau of Engineering Design and Construction.

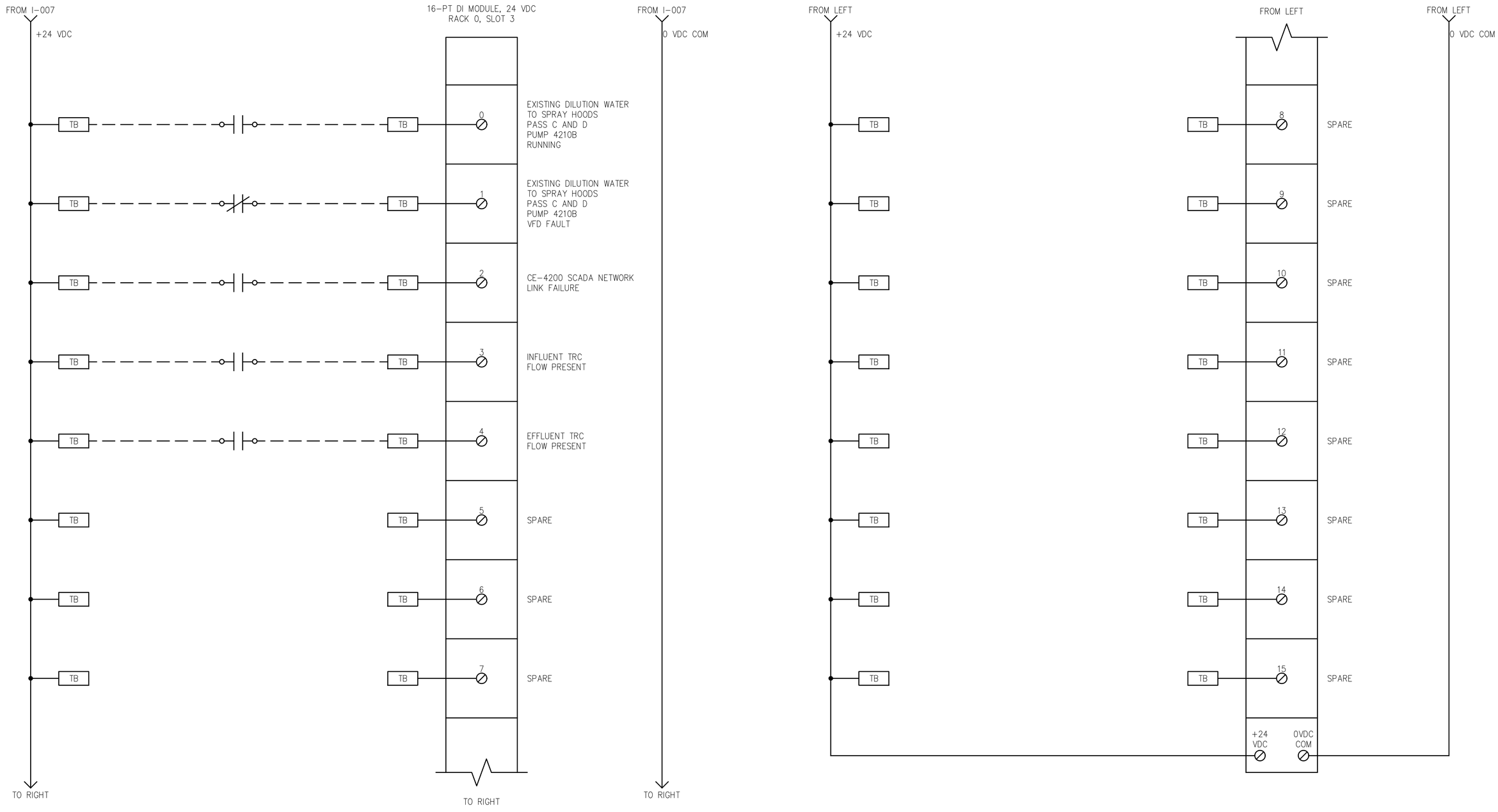

BID SET

SUBMITTAL DATE: 10/2026

GRAPHIC SCALES CHECK BEFORE USE

IF SHEET IS LESS THAN 22" X 34" IT IS A REDUCED PRINT. SCALE ACCORDINGLY

NO.	DATE	REVISIONS/DESCRIPTION	APPR'D.

DESIGNED BY: LH
DRAWN BY: MM
CHECKED BY: CW
DESIGN LEAD: CURT WENDT, PE
PROJECT MANAGER: FRANK VISINGARDI,JR., PE

STATE OF NEW YORK · CURT W. WENDT · 106710 · LICENSED PROFESSIONAL ENGINEER

Environmental Protection

ACCOUNTABLE MANAGER: STELLA UWAECHIE
PORTFOLIO MANAGER: ANDREW NG, P.E.
EXECUTIVE DIRECTOR: KENNETH E. MORIARTY, P.E.

"WARNING-IT IS A VIOLATION, OF THE NEW YORK STATE EDUCATION LAW, SECTION, 7209.2, FOR ANY PERSON, UNLESS (S)HE IS ACTING UNDER THE DIRECTION OF A LICENSED PROFESSIONAL ENGINEER, TO ALTER THIS DOCUMENT IN ANY WAY. IF ALTERED, THE ALTERING PERSON SHALL COMPLY WITH THE REQUIREMENTS OF NEW YORK EDUCATION, LAW, SECTION, 7209.2."

NEW YORK CITY ENVIRONMENTAL PROTECTION
BUREAU OF ENGINEERING DESIGN & CONSTRUCTION
96-05 HORACE HARDING EXPRESSWAY 5th FLOOR
CORONA, NEW YORK 11368
www.nyc.gov/dep

CAPITAL PROJECT WP-282
STATEN ISLAND, NY, OAKWOOD BEACH WRRF
CONTRACT OB-144A

PLC-4200 DIGITAL INPUT MODULE
SHEET 3 OF 3

DATE: OCTOBER 2026
SHEET NO: 68 OF 74
DRAWING NO. I-010.00

Last Saved By: ZALBER Last Date Saved: 7/8/2026 9:49 AM Date & Time Plotted: 9/9/2026 11:43 AM
Paper Size Printed/Plotted: ANSI full bleed D (34.00 x 22.00 Inches) Plot Scale:1:1 Plot Style Table: DEP_BEDC_22x34_ByWeight.ctb
Drawing File Name & Drive Location: C:\pwworking\east01\d4119068\I-010.00.dwg

All inquiries regarding this drawing(s) or project should be made to NYC Environmental Protection, Bureau of Engineering Design and Construction.

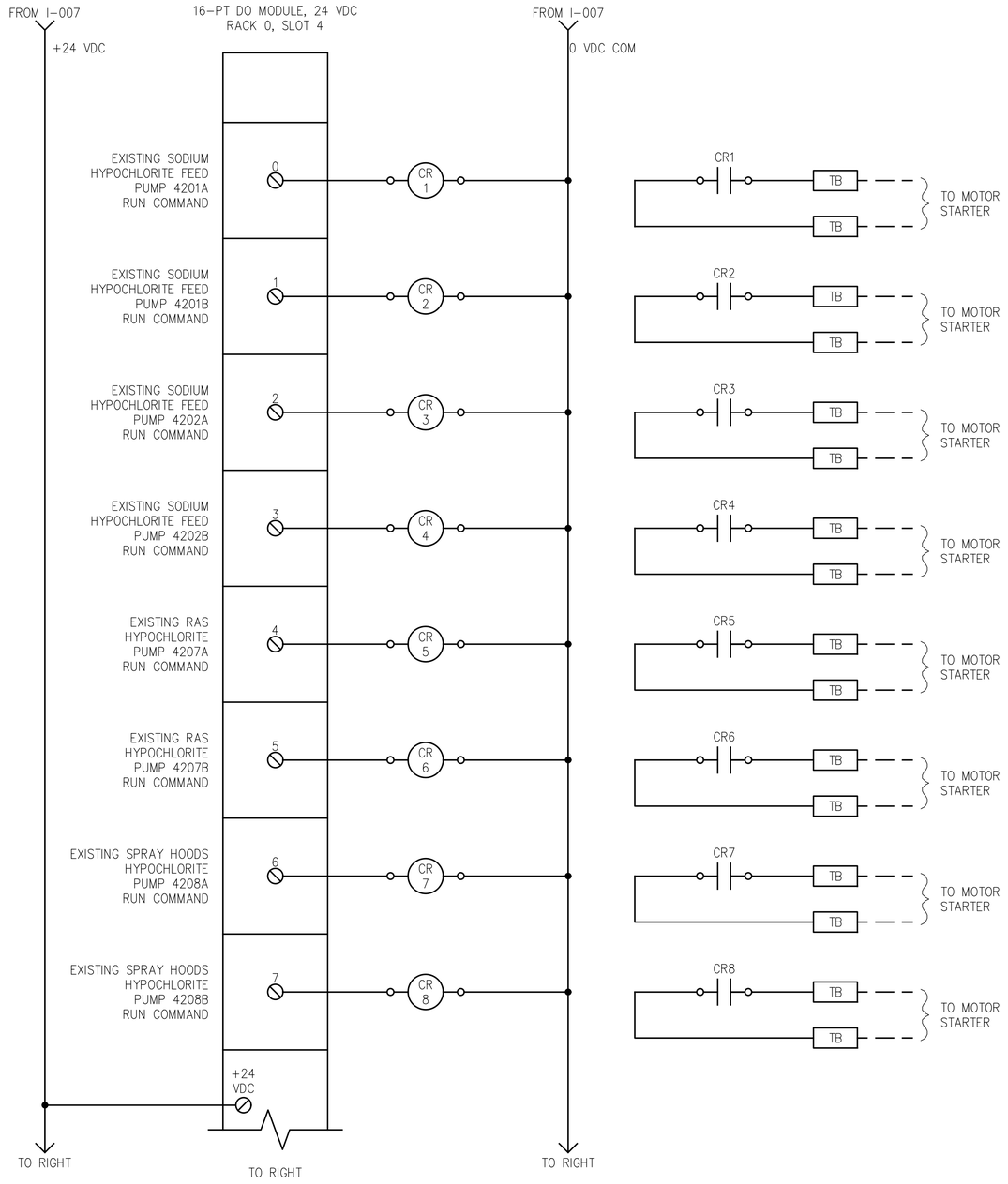

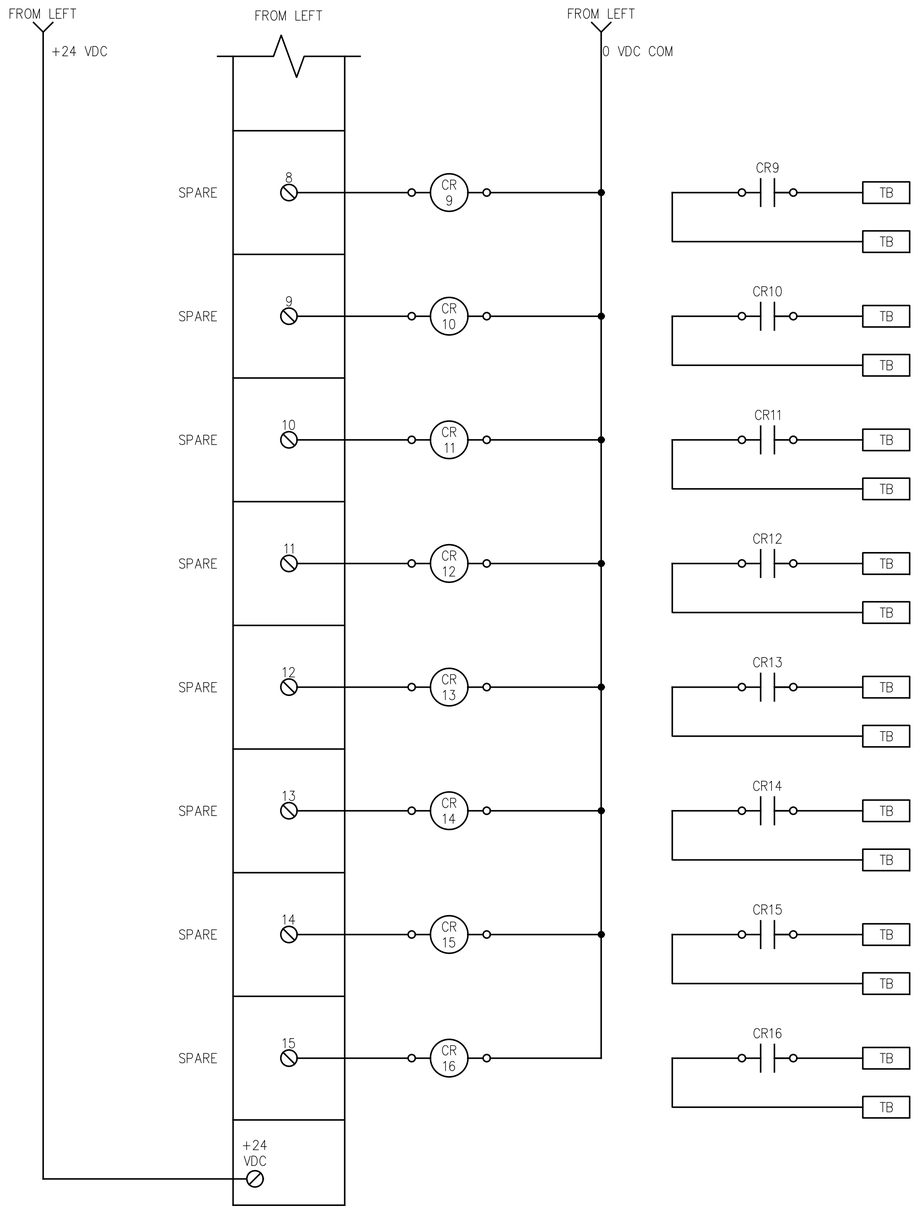

BID SET

SUBMITTAL DATE: 10/2026

GRAPHIC SCALES CHECK BEFORE USE

IF SHEET IS LESS THAN 22" X 34" IT IS A REDUCED PRINT. SCALE ACCORDINGLY

NO.	DATE	REVISIONS/DESCRIPTION	APPR'D.

DESIGNED BY: LH
DRAWN BY: MM
CHECKED BY: CW
DESIGN LEAD: CURT WENDT, PE
PROJECT MANAGER: FRANK VISINGARDI,JR., PE

STATE OF NEW YORK · CURT W. WENDT · 106710 · LICENSED PROFESSIONAL ENGINEER

Environmental Protection

ACCOUNTABLE MANAGER: STELLA UWAECHIE
PORTFOLIO MANAGER: ANDREW NG, P.E.
EXECUTIVE DIRECTOR: KENNETH E. MORIARTY, P.E.

"WARNING-IT IS A VIOLATION, OF THE NEW YORK STATE EDUCATION LAW, SECTION, 7209.2, FOR ANY PERSON, UNLESS (S)HE IS ACTING UNDER THE DIRECTION OF A LICENSED PROFESSIONAL ENGINEER, TO ALTER THIS DOCUMENT IN ANY WAY. IF ALTERED, THE ALTERING PERSON SHALL COMPLY WITH THE REQUIREMENTS OF NEW YORK EDUCATION, LAW, SECTION, 7209.2."

NEW YORK CITY ENVIRONMENTAL PROTECTION
BUREAU OF ENGINEERING DESIGN & CONSTRUCTION
96-05 HORACE HARDING EXPRESSWAY 5th FLOOR
CORONA, NEW YORK 11368
www.nyc.gov/dep

CAPITAL PROJECT WP-282
STATEN ISLAND, NY, OAKWOOD BEACH WRRF
CONTRACT OB-144A

PLC-4200 DIGITAL OUTPUT MODULE

DATE: OCTOBER 2026
SHEET NO: 69 OF 74
DRAWING NO. I-011.00

Last Saved By:ZALBER Last Date Saved:7/8/2026 9:53 AM Date & Time Plotted: 9/9/2026 11:44 AM
Paper Size Printed/Plotted: ANSI full bleed D (34.00 x 22.00 Inches) Plot Scale::1 Plot Style Table: DEP_BEDC_22x34_ByWeight.ctb
Drawing File Name & Drive Location: C:\pwworking\east01\d4119068\I-011.00.dwg
All inquiries regarding this drawing(s) or project should be made to NYC Environmental Protection, Bureau of Engineering Design and Construction.

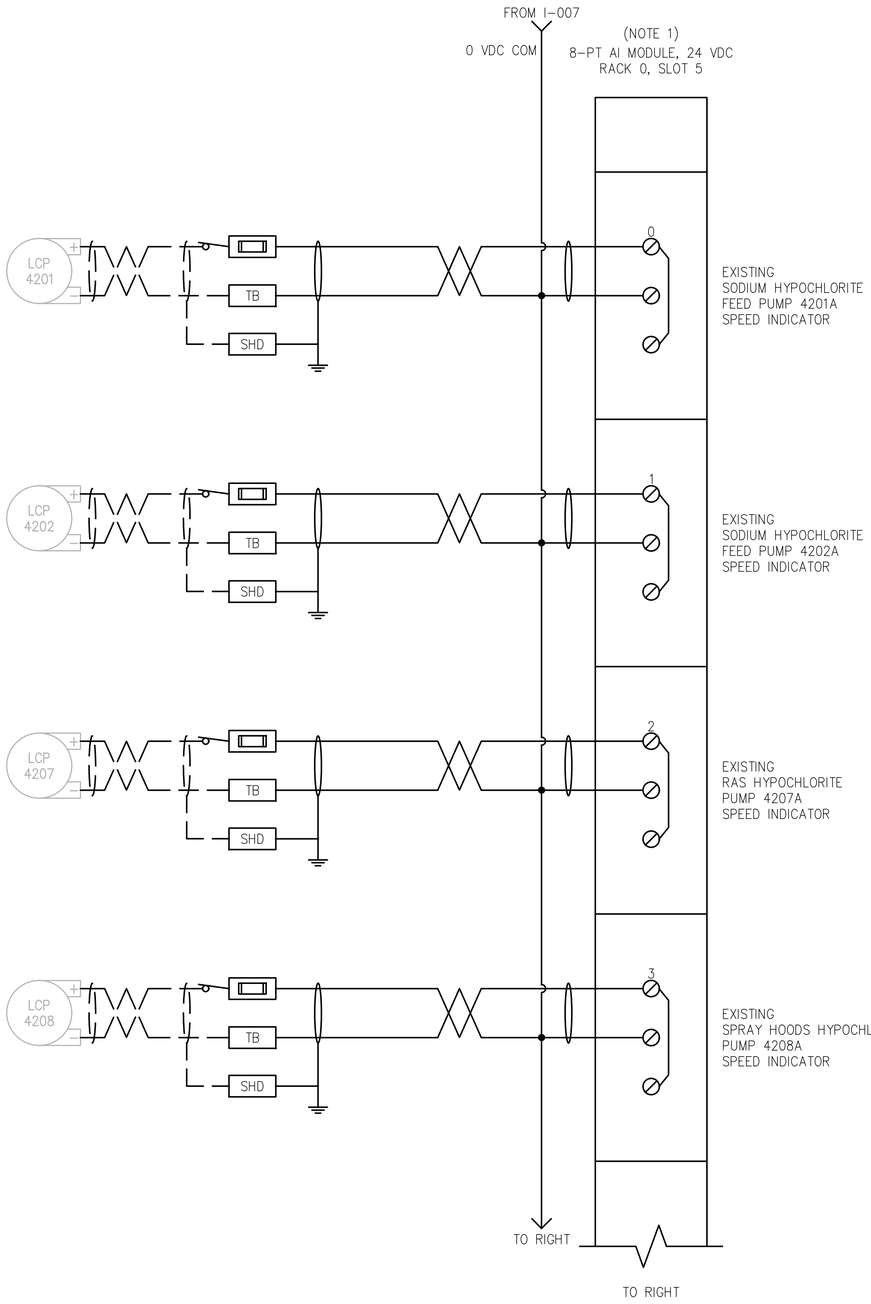

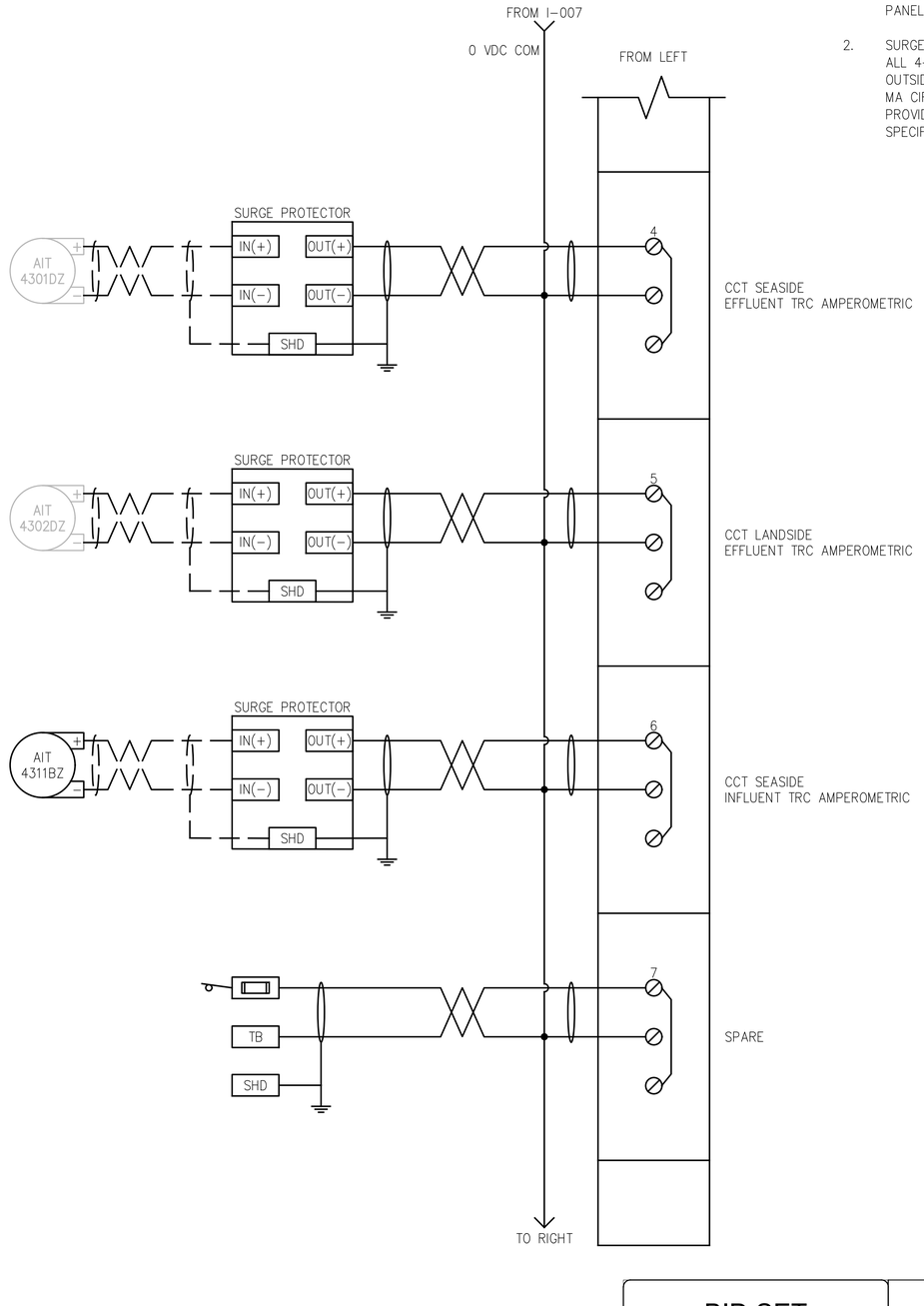

NOTES:

1. FUSES SHALL BE SIZED BY THE CONTROL PANEL SUPPLIER.
2. SURGE PROTECTOR SHALL BE PROVIDED FOR ALL 4-20MA CIRCUITS WHERE ANY PART IS OUTSIDE THE BUILDING ENVELOPE. FOR 4-20 MA CIRCUITS INSIDE BUILDING ENVELOPE PROVIDE FUSES AS NEEDED. REFER TO SPECIFICATION SECTION 40 78 90

BID SET

SUBMITTAL DATE: 10/2026

GRAPHIC SCALES CHECK BEFORE USE

IF SHEET IS LESS THAN 22" X 34" IT IS A REDUCED PRINT. SCALE ACCORDINGLY

NO.	DATE	REVISIONS/DESCRIPTION	APPR'D.

DESIGNED BY: LH
DRAWN BY: MM
CHECKED BY: CW
DESIGN LEAD: CURT WENDT, PE
PROJECT MANAGER: FRANK VISINGARDI, PE

STATE OF NEW YORK · CURT W. WENDT · 106710 · LICENSED PROFESSIONAL ENGINEER

Environmental Protection

ACCOUNTABLE MANAGER: STELLA UWAECHIE
PORTFOLIO MANAGER: ANDREW NG, P.E.
EXECUTIVE DIRECTOR: KENNETH E. MORIARTY, P.E.

"WARNING-IT IS A VIOLATION, OF THE NEW YORK STATE EDUCATION LAW, SECTION, 7209.2, FOR ANY PERSON, UNLESS (S)HE IS ACTING UNDER THE DIRECTION OF A LICENSED PROFESSIONAL ENGINEER, TO ALTER THIS DOCUMENT IN ANY WAY. IF ALTERED, THE ALTERING PERSON SHALL COMPLY WITH THE REQUIREMENTS OF NEW YORK EDUCATION, LAW, SECTION, 7209.2."

NEW YORK CITY ENVIRONMENTAL PROTECTION
BUREAU OF ENGINEERING DESIGN & CONSTRUCTION
96-05 HORACE HARDING EXPRESSWAY 5th FLOOR
CORONA, NEW YORK 11368
www.nyc.gov/dep

CAPITAL PROJECT WP-282
STATEN ISLAND, NY, OAKWOOD BEACH WRRF
CONTRACT OB-144A

PLC-4200 ANALOG INPUT MODULE
SHEET 1 OF 3

DATE: OCTOBER 2026
SHEET NO: 70 OF 74
DRAWING NO. I-012.00

Last Saved By:ZALBER Last Date Saved:7/8/2026 9:54 AM Date & Time Plotted: 9/9/2026 11:45 AM
Paper Size Printed/Plotted: ANSI full bleed D (34.00 x 22.00 Inches) Plot Scale:1:1 Plot Style Table: DEP_BEDC_22x34_ByWeight.ctb
Drawing File Name & Drive Location: C:\pwworking\east01\d4119068\I-012.00.dwg
All inquiries regarding this drawing(s) or project should be made to NYC Environmental Protection, Bureau of Engineering Design and Construction.

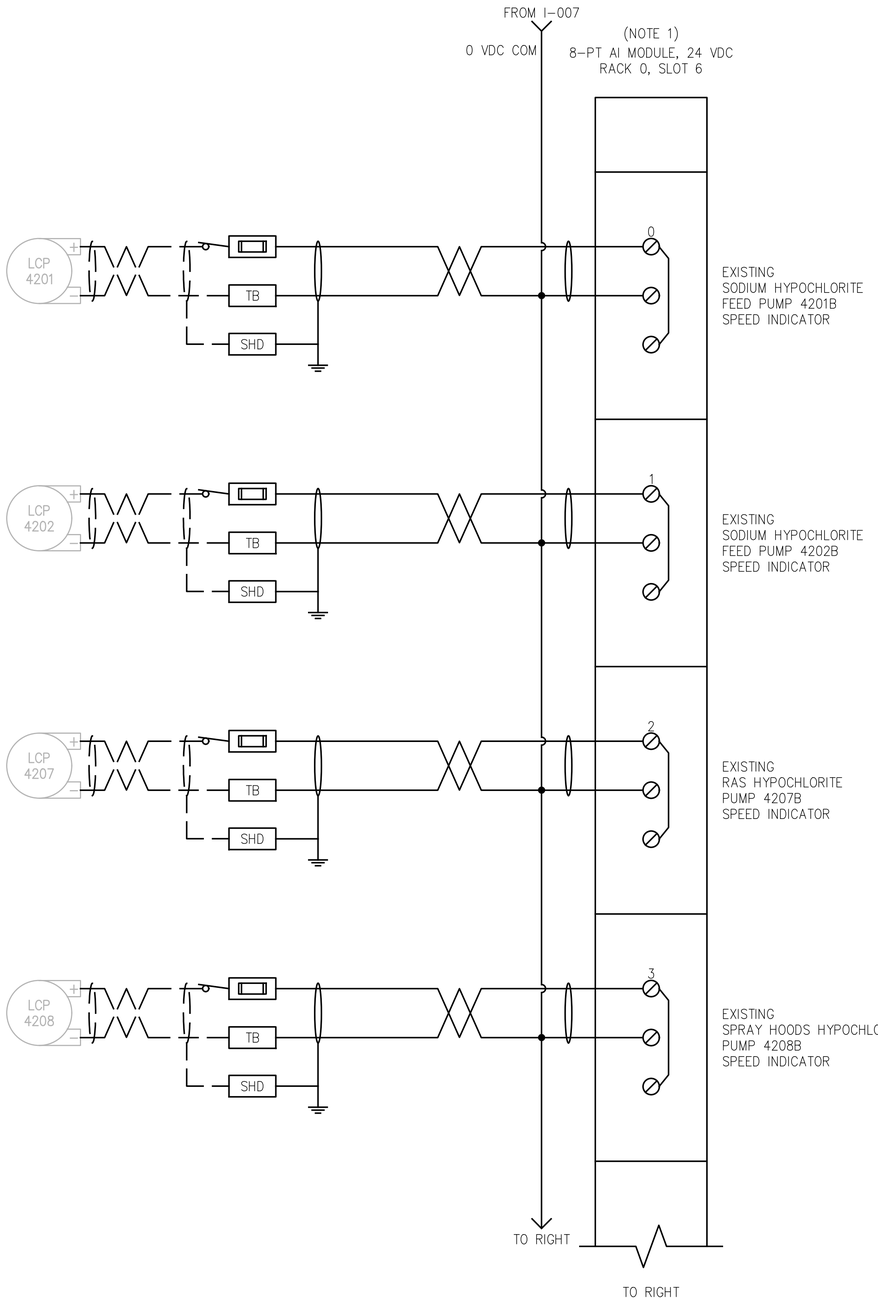

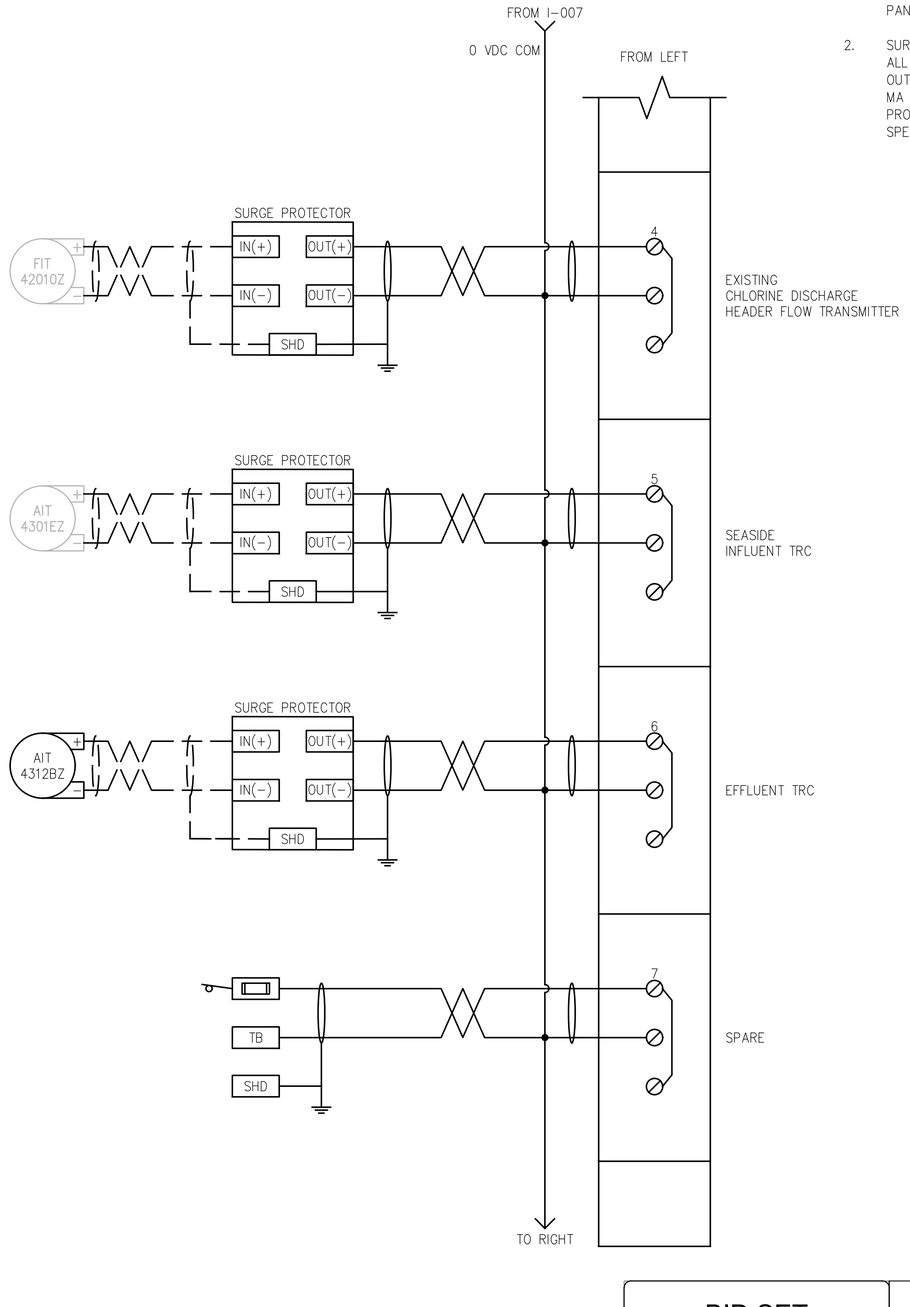

NOTES:

1. FUSES SHALL BE SIZED BY THE CONTROL PANEL SUPPLIER.
2. SURGE PROTECTOR SHALL BE PROVIDED FOR ALL 4-20MA CIRCUITS WHERE ANY PART IS OUTSIDE THE BUILDING ENVELOPE. FOR 4-20 MA CIRCUITS INSIDE BUILDING ENVELOPE PROVIDE FUSES AS NEEDED. REFER TO SPECIFICATION SECTION 40 78 90

BID SET

SUBMITTAL DATE: 10/2026

GRAPHIC SCALES CHECK BEFORE USE

IF SHEET IS LESS THAN 22" X 34" IT IS A REDUCED PRINT. SCALE ACCORDINGLY

NO.	DATE	REVISIONS/DESCRIPTION	APPR'D.

DESIGNED BY: LH
DRAWN BY: MM
CHECKED BY: CW
DESIGN LEAD: CURT WENDT, PE
PROJECT MANAGER: FRANK VISINGARDI,JR., PE

STATE OF NEW YORK · CURT W. WENDT · 106710 · LICENSED PROFESSIONAL ENGINEER

Environmental Protection

ACCOUNTABLE MANAGER: STELLA UWAECHIE
PORTFOLIO MANAGER: ANDREW NG, P.E.
EXECUTIVE DIRECTOR: KENNETH E. MORIARTY, P.E.

"WARNING-IT IS A VIOLATION, OF THE NEW YORK STATE EDUCATION LAW, SECTION, 7209.2, FOR ANY PERSON, UNLESS (S)HE IS ACTING UNDER THE DIRECTION OF A LICENSED PROFESSIONAL ENGINEER, TO ALTER THIS DOCUMENT IN ANY WAY. IF ALTERED, THE ALTERING PERSON SHALL COMPLY WITH THE REQUIREMENTS OF NEW YORK EDUCATION, LAW, SECTION, 7209.2."

NEW YORK CITY ENVIRONMENTAL PROTECTION
BUREAU OF ENGINEERING DESIGN & CONSTRUCTION
96-05 HORACE HARDING EXPRESSWAY 5th FLOOR
CORONA, NEW YORK 11368
www.nyc.gov/dep

CAPITAL PROJECT WP-282
STATEN ISLAND, NY, OAKWOOD BEACH WRRF
CONTRACT OB-144A

PLC-4200 ANALOG INPUT MODULE
SHEET 2 OF 3

DATE: OCTOBER 2026
SHEET NO: 71 OF 74
DRAWING NO. I-013.00

Last Saved By:ZALBER Last Date Saved:7/8/2026 9:55 AM Date & Time Plotted: 9/9/2026 2:07 PM
Paper Size Printed/Plotted: ANSI full bleed D (34.00 x 22.00 Inches) Plot Scale:1:1 Plot Style Table: DEP_BEDC_22x34_ByWeight.ctb
Drawing File Name & Drive Location: C:\pwworking\east01\d4119068\I-013.00.dwg

All inquiries regarding this drawing(s) or project should be made to NYC Environmental Protection, Bureau of Engineering Design and Construction.

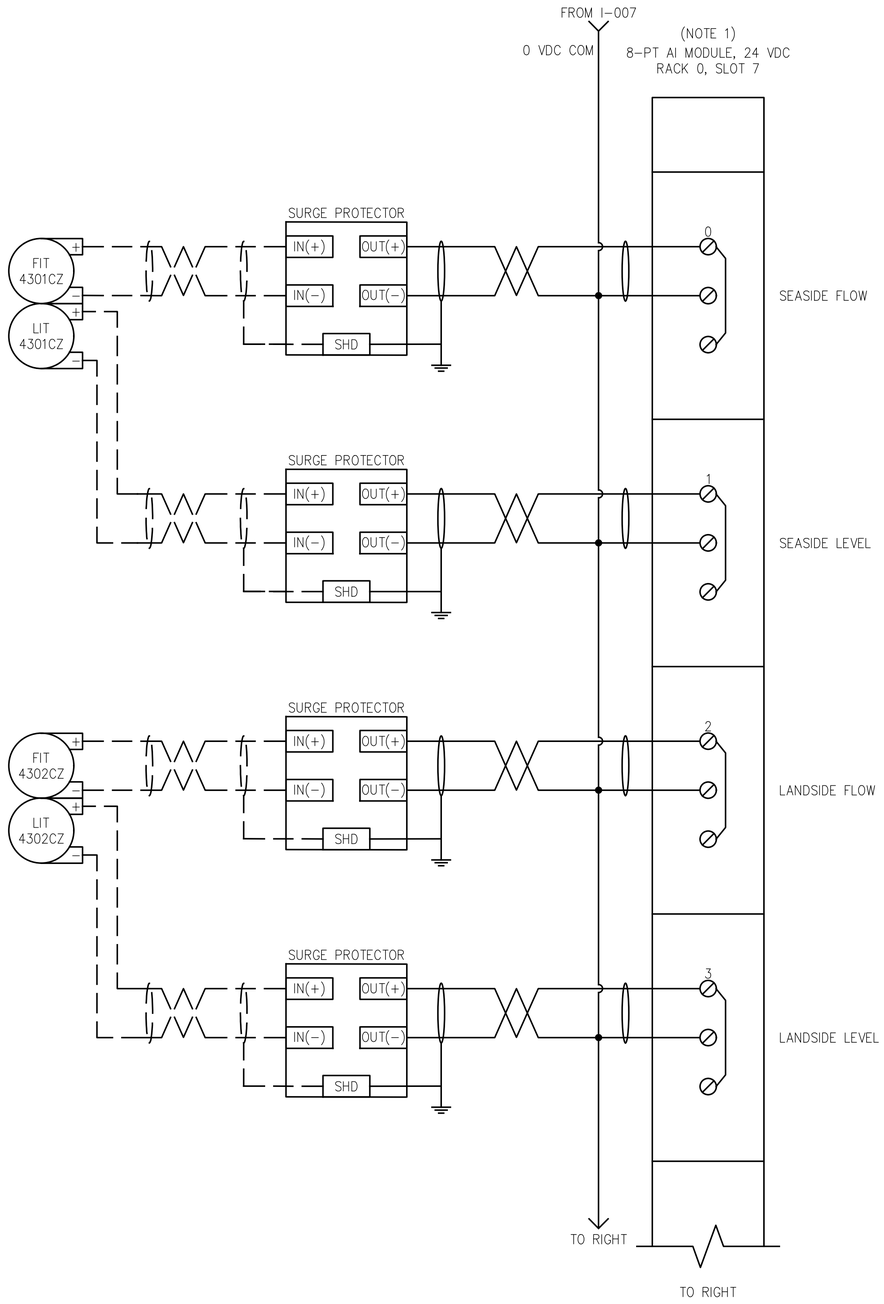

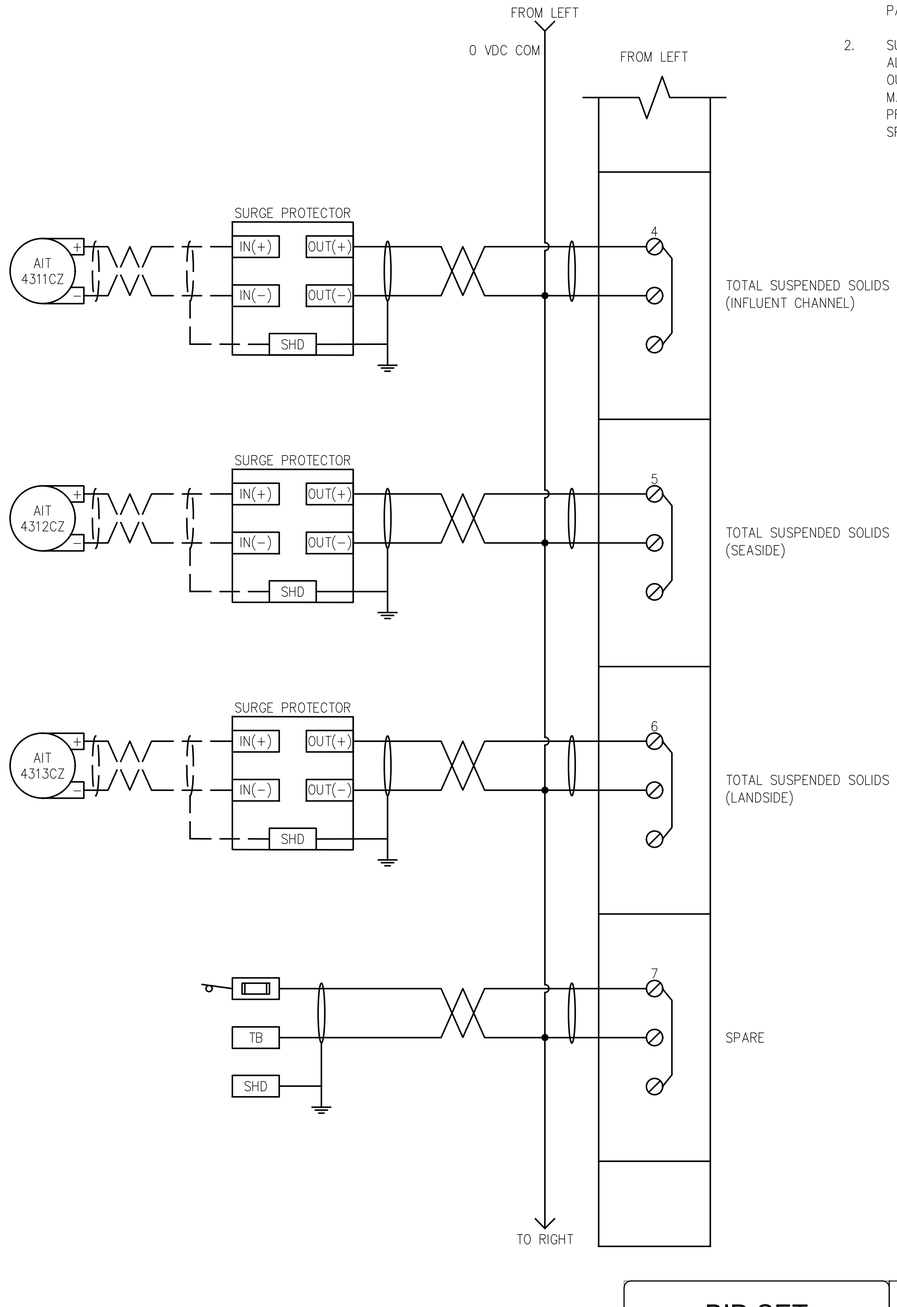

NOTES:

1. FUSES SHALL BE SIZED BY THE CONTROL PANEL SUPPLIER.
2. SURGE PROTECTOR SHALL BE PROVIDED FOR ALL 4-20MA CIRCUITS WHERE ANY PART IS OUTSIDE THE BUILDING ENVELOPE. FOR 4-20 MA CIRCUITS INSIDE BUILDING ENVELOPE PROVIDE FUSES AS NEEDED. REFER TO SPECIFICATION SECTION 40 78 90

BID SET

SUBMITTAL DATE: 10/2026

GRAPHIC SCALES CHECK BEFORE USE

IF SHEET IS LESS THAN 22" X 34" IT IS A REDUCED PRINT. SCALE ACCORDINGLY

NO.	DATE	REVISIONS/DESCRIPTION	APPR'D.

DESIGNED BY: LH
DRAWN BY: MM
CHECKED BY: CW
DESIGN LEAD: CURT WENDT, PE
PROJECT MANAGER: FRANK VISINGARDI,JR., PE

STATE OF NEW YORK · CURT W. WENDT · 106710 · LICENSED PROFESSIONAL ENGINEER

Environmental Protection

ACCOUNTABLE MANAGER: STELLA UWAECHIE
PORTFOLIO MANAGER: ANDREW NG, P.E.
EXECUTIVE DIRECTOR: KENNETH E. MORIARTY, P.E.

"WARNING-IT IS A VIOLATION, OF THE NEW YORK STATE EDUCATION LAW, SECTION, 7209.2, FOR ANY PERSON, UNLESS (S)HE IS ACTING UNDER THE DIRECTION OF A LICENSED PROFESSIONAL ENGINEER, TO ALTER THIS DOCUMENT IN ANY WAY. IF ALTERED, THE ALTERING PERSON SHALL COMPLY WITH THE REQUIREMENTS OF NEW YORK EDUCATION, LAW, SECTION, 7209.2."

NEW YORK CITY ENVIRONMENTAL PROTECTION
BUREAU OF ENGINEERING DESIGN & CONSTRUCTION
96-05 HORACE HARDING EXPRESSWAY 5th FLOOR
CORONA, NEW YORK 11368
www.nyc.gov/dep

CAPITAL PROJECT WP-282
STATEN ISLAND, NY, OAKWOOD BEACH WRRF
CONTRACT OB-144A

PLC-4200 ANALOG INPUT MODULE
SHEET 3 OF 3

DATE: OCTOBER 2026
SHEET NO: 72 OF 74
DRAWING NO. I-014.00

Last Saved By:ZALBER Last Date Saved:7/8/2026 9:56 AM Date & Time Plotted: 9/9/2026 2:07 PM
Paper Size Printed/Plotted: ANSI full bleed D (34.00 x 22.00 Inches) Plot Scale:1:1 Plot Style Table: DEP_BEDC_22x34_ByWeight.ctb
Drawing File Name & Drive Location: C:\pwworking\east01\d4119068\I-014.00.dwg

All inquiries regarding this drawing(s) or project should be made to NYC Environmental Protection, Bureau of Engineering Design and Construction.

(NOTE 1)
8-PT AO MODULE, 24 VDC
RACK 0, SLOT 8

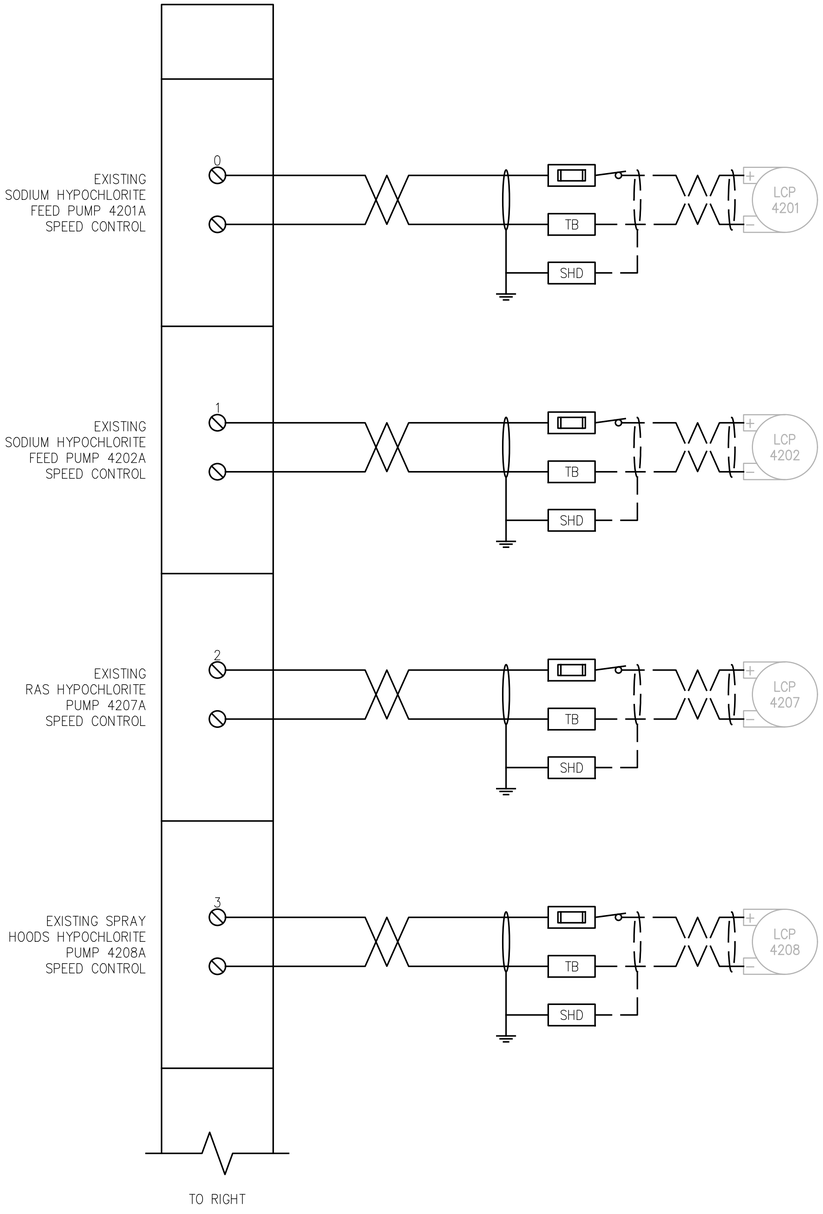

FROM LEFT

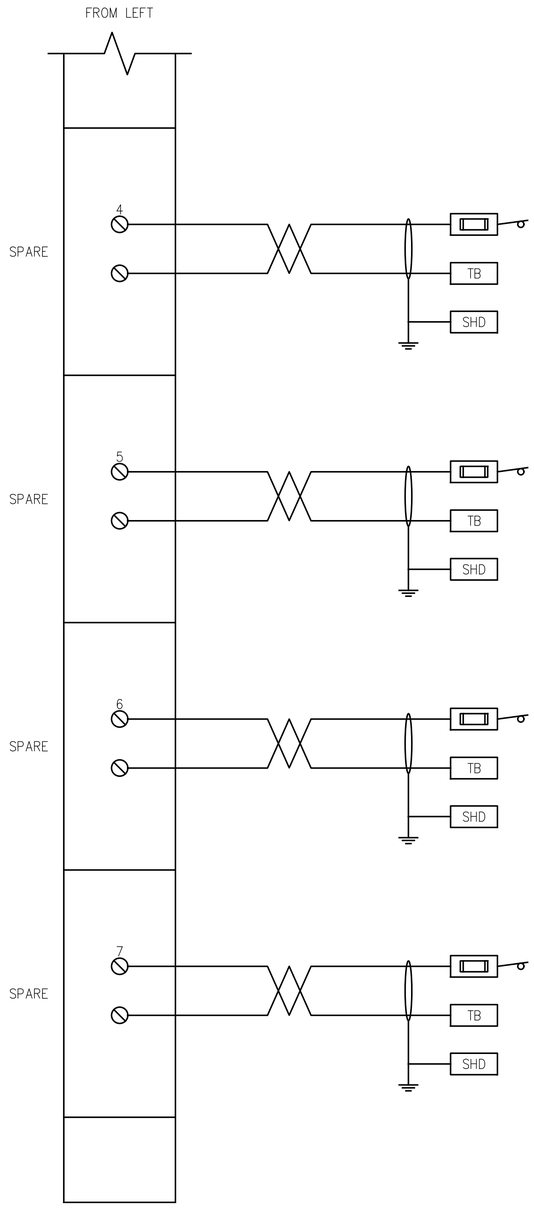

NOTES:

1. FUSES SHALL BE SIZED BY THE CONTROL PANEL SUPPLIER.
2. SURGE PROTECTOR SHALL BE PROVIDED FOR ALL 4-20MA CIRCUITS WHERE ANY PART IS OUTSIDE THE BUILDING ENVELOPE. FOR 4-20 MA CIRCUITS INSIDE BUILDING ENVELOPE PROVIDE FUSES AS NEEDED. REFER TO SPECIFICATION SECTION 40 78 90

BID SET

SUBMITTAL DATE: 10/2026

GRAPHIC SCALES CHECK BEFORE USE

IF SHEET IS LESS THAN 22" X 34" IT IS A REDUCED PRINT. SCALE ACCORDINGLY

NO.	DATE	REVISIONS/DESCRIPTION	APPR'D.

DESIGNED BY: LH
DRAWN BY: MM
CHECKED BY: CW
DESIGN LEAD: CURT WENDT, PE
PROJECT MANAGER: FRANK VISINGARDI,JR., PE

STATE OF NEW YORK · CURT W. WENDT · 106710 · LICENSED PROFESSIONAL ENGINEER

Environmental Protection

ACCOUNTABLE MANAGER: STELLA UWAECHIE
PORTFOLIO MANAGER: ANDREW NG, P.E.
EXECUTIVE DIRECTOR: KENNETH E. MORIARTY, P.E.

"WARNING-IT IS A VIOLATION, OF THE NEW YORK STATE EDUCATION LAW, SECTION, 7209.2, FOR ANY PERSON, UNLESS (S)HE IS ACTING UNDER THE DIRECTION OF A LICENSED PROFESSIONAL ENGINEER, TO ALTER THIS DOCUMENT IN ANY WAY. IF ALTERED, THE ALTERING PERSON SHALL COMPLY WITH THE REQUIREMENTS OF NEW YORK EDUCATION, LAW, SECTION, 7209.2."

NEW YORK CITY ENVIRONMENTAL PROTECTION
BUREAU OF ENGINEERING DESIGN & CONSTRUCTION
96-05 HORACE HARDING EXPRESSWAY 5th FLOOR
CORONA, NEW YORK 11368
www.nyc.gov/dep

CAPITAL PROJECT WP-282
STATEN ISLAND, NY, OAKWOOD BEACH WRRF
CONTRACT OB-144A

PLC-4200 ANALOG OUTPUT MODULE
SHEET 1 OF 2

DATE: OCTOBER 2026
SHEET NO: 73 OF 74
DRAWING NO. I-015.00

Last Saved By: ZALBER Last Date Saved: 7/8/2026 9:57 AM Date & Time Plotted: 9/9/2026 2:08 PM
Paper Size Printed/Plotted: ANSI full bleed D (34.00 x 22.00 Inches) Plot Scale:1:1 Plot Style Table: DEP_BEDC_22x34_ByWeight.ctb
Drawing File Name & Drive Location: C:\pwworking\east01\d4119068\I-015.00.dwg

All inquiries regarding this drawing(s) or project should be made to NYC Environmental Protection, Bureau of Engineering Design and Construction.

(NOTE 1)
8-PT AO MODULE, 24 VDC
RACK 0, SLOT 9

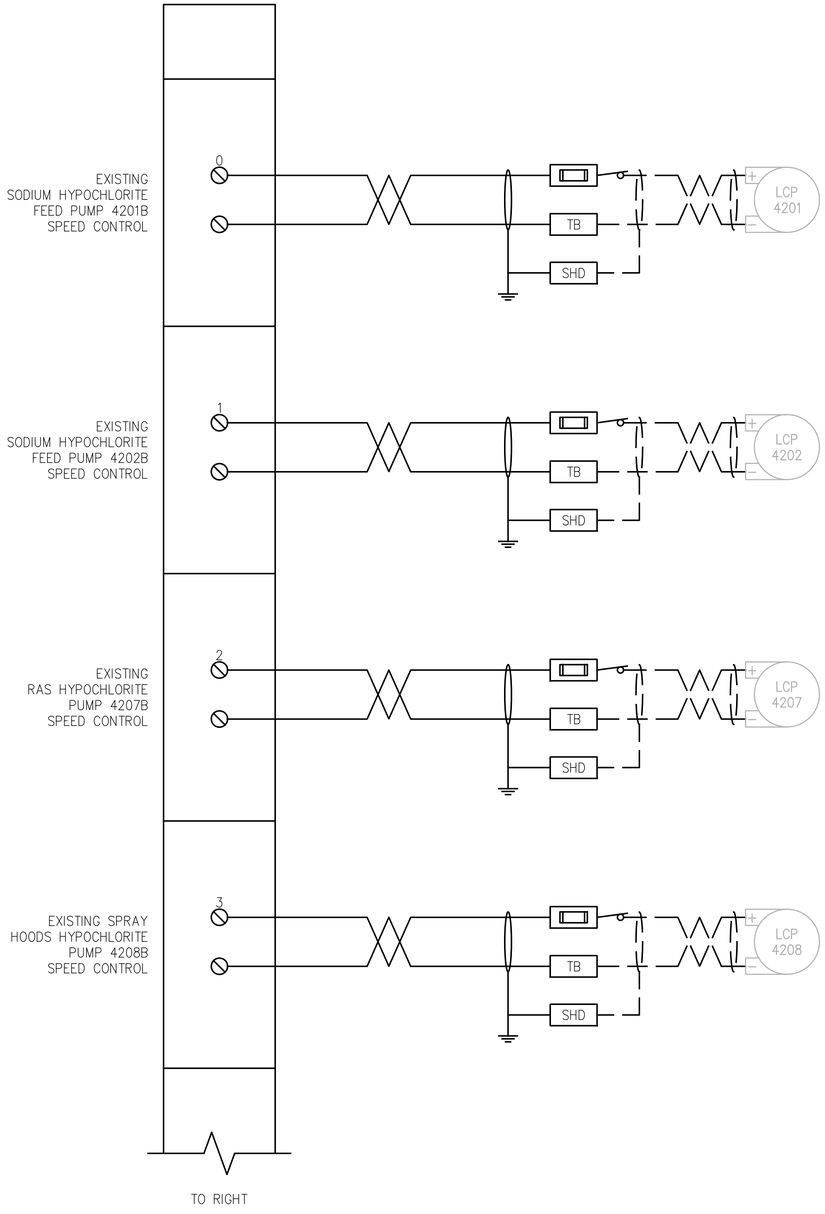

FROM LEFT

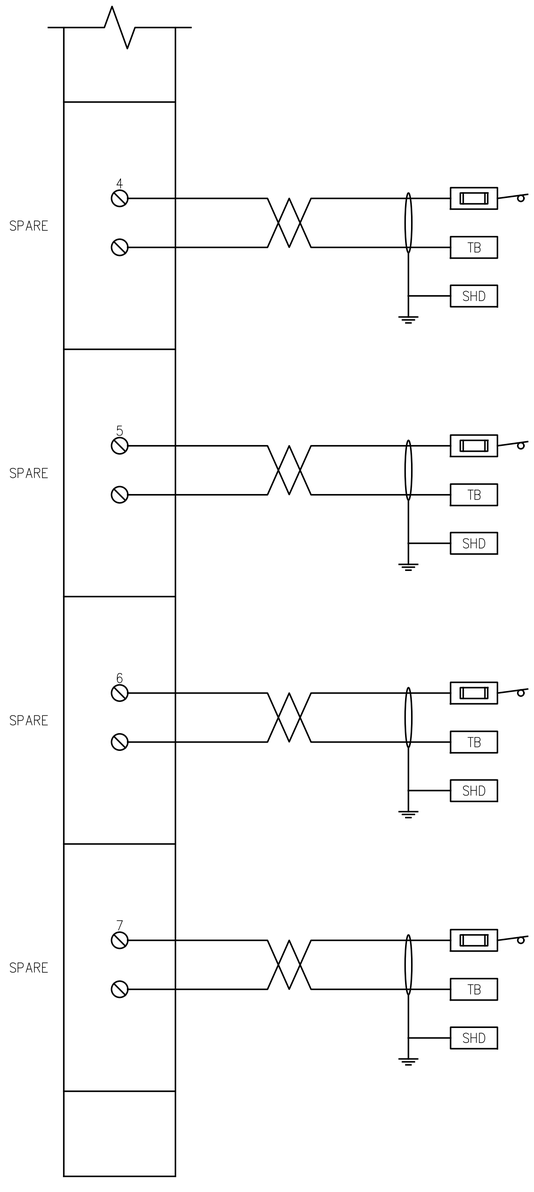

NOTES:

1. FUSES SHALL BE SIZED BY THE CONTROL PANEL SUPPLIER.
2. SURGE PROTECTOR SHALL BE PROVIDED FOR ALL 4-20MA CIRCUITS WHERE ANY PART IS OUTSIDE THE BUILDING ENVELOPE. FOR 4-20 MA CIRCUITS INSIDE BUILDING ENVELOPE PROVIDE FUSES AS NEEDED. REFER TO SPECIFICATION SECTION 40 78 90

BID SET

SUBMITTAL DATE: 10/2026

GRAPHIC SCALES CHECK BEFORE USE

IF SHEET IS LESS THAN 22" X 34" IT IS A REDUCED PRINT. SCALE ACCORDINGLY

NO.	DATE	REVISIONS/DESCRIPTION	APPR'D.

DESIGNED BY: LH
DRAWN BY: MM
CHECKED BY: CW
DESIGN LEAD: CURT WENDT, PE
PROJECT MANAGER: FRANK VISINGARDI,JR., PE

STATE OF NEW YORK · CURT W. WENDT · 106710 · LICENSED PROFESSIONAL ENGINEER

Environmental Protection

ACCOUNTABLE MANAGER: STELLA UWAECHIE
PORTFOLIO MANAGER: ANDREW NG, P.E.
EXECUTIVE DIRECTOR: KENNETH E. MORIARTY, P.E.

"WARNING-IT IS A VIOLATION, OF THE NEW YORK STATE EDUCATION LAW, SECTION, 7209.2, FOR ANY PERSON, UNLESS (S)HE IS ACTING UNDER THE DIRECTION OF A LICENSED PROFESSIONAL ENGINEER, TO ALTER THIS DOCUMENT IN ANY WAY. IF ALTERED, THE ALTERING PERSON SHALL COMPLY WITH THE REQUIREMENTS OF NEW YORK EDUCATION, LAW, SECTION, 7209.2."

NEW YORK CITY ENVIRONMENTAL PROTECTION
BUREAU OF ENGINEERING DESIGN & CONSTRUCTION
96-05 HORACE HARDING EXPRESSWAY 5th FLOOR
CORONA, NEW YORK 11368
www.nyc.gov/dep

CAPITAL PROJECT WP-282
STATEN ISLAND, NY, OAKWOOD BEACH WRRF
CONTRACT OB-144A

PLC-4200 ANALOG OUTPUT MODULE
SHEET 2 OF 2

DATE: OCTOBER 2026
SHEET NO: 74 OF 74
DRAWING NO. I-016.00

Last Saved By: ZALBER Last Date Saved: 7/8/2026 9:58 AM Date & Time Plotted: 9/9/2026 2:09 PM
Paper Size Printed/Plotted: ANSI full bleed D (34.00 x 22.00 Inches) Plot Scale:1:1 Plot Style Table: DEP_BEDC_22x34_ByWeight.ctb
Drawing File Name & Drive Location: C:\pwworking\east01\d4119068\I-016.00.dwg

All inquiries regarding this drawing(s) or project should be made to NYC Environmental Protection, Bureau of Engineering Design and Construction.